BAUKRANE

BAUFRAME	WALL FORMWORK SYSTEM
	SEPTEMBER 2020 V1

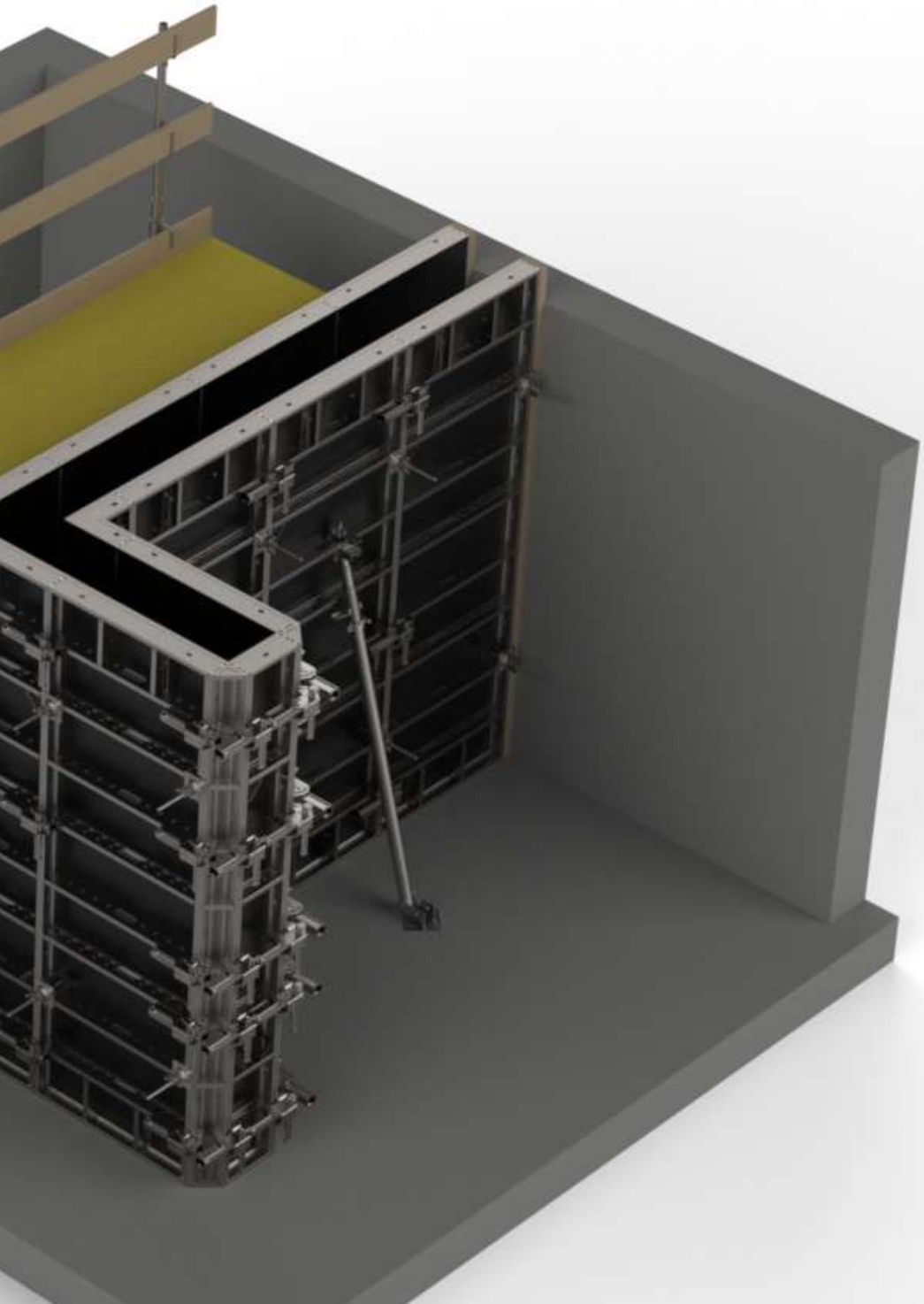

TABLE OF CONTENTS:

BAUFRAME PANEL:

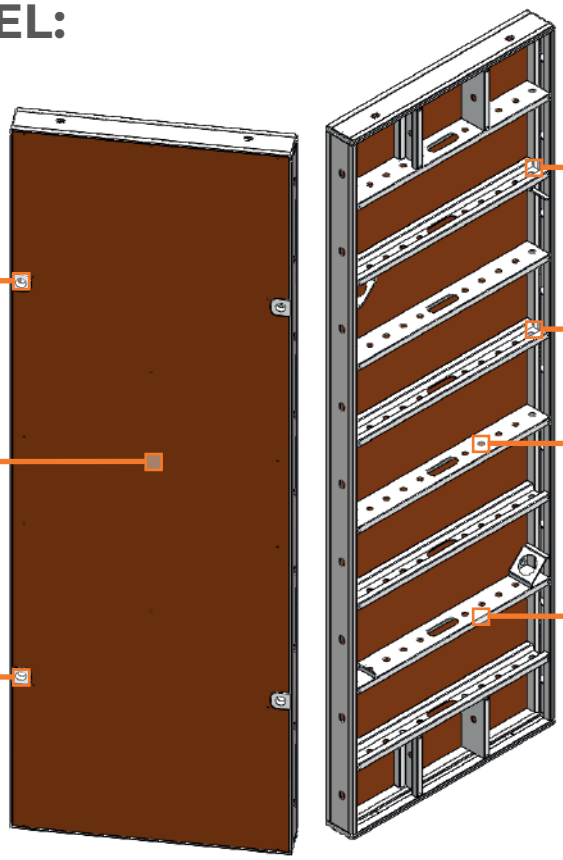

BAUFRAME ALU PANEL:

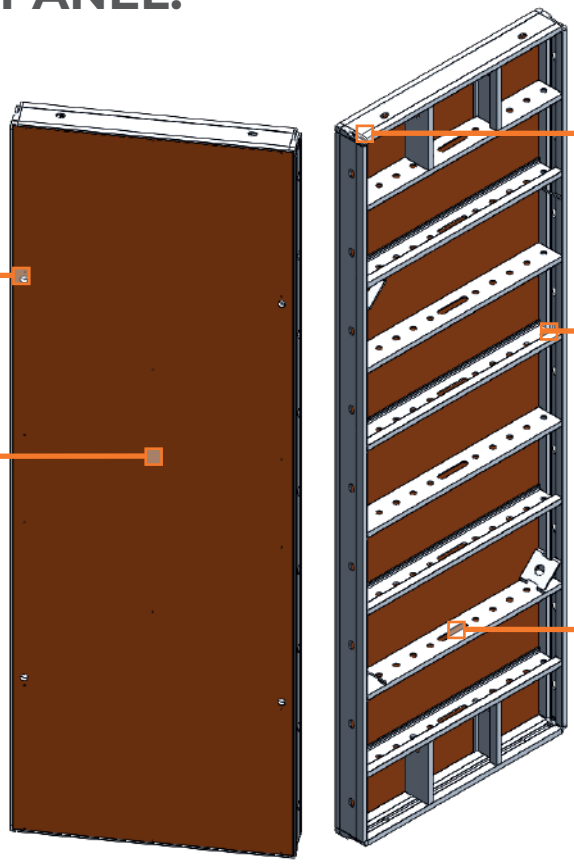

1. PRODUCT PURPOSE.

Both the Bauframe system wall formwork and the Bauframe Alu are universal frame formwork, designed for a wide range of applications in the construction industry, such as:
- reinforced concrete walls in residential and industrial constructions,
- vertical partitions in engineering construction
- columns and reinforced cores
- massive foundations and pad foundations.

The system has been designed to meet all technical, economical and safety requirements for every residential and industrial construction. Thanks to its construction, this formwork is easy and comfortable to handle by hand or with a crane on site.

2. PRODUCT FEATURES.

The Bauframe formwork is a technically advanced product of the highest quality, designed and manufactured by Baukrane using the latest tools and methods. The frame of every steel panel is made of a closed outer profile with the height of 121 mm and width of 20 mm, and with the inner profile of 105 mm height and 25 mm width. The Bauframe Alu panels consist of the outer aluminium profile with the height of 121 mm and the width of 20 mm, and the inner aluminium profile with the height of 105 mm and the width of 20 mm.

The inner profiles are equipped with function holes for connecting the additional accessories. The steel frames are protected against corrosion by hot dip galvanising. The shuttering skin of the panels is made of a high quality 15 mm thick birch plywood. On special request, it is possible to insert a plywood covered with plastic into the frame.

Every steel frame of the Bauframe system has an innovative solution in the form of steel profiles with parabolic openings for tie rods, which protect the shuttering skin from damage during assembly and disassembly. This solution significantly increases the durability of the shuttering skin and extends the periods between its replacement.

The holes in the aluminium panels are equipped with a hoop made of a durable and lightweight aluminium alloy, which effectively protects the plywood from damage, without an excessive increase of weight.

The innovative construction solutions applied, high precision of manufacturing, the use of high quality products in the production process, as well as a meticulous quality control of every element guarantee the highest durability of the formwork, as well as comfort and safety of use.

Permissible pressure of fresh concrete is 60kN/m^2.

Compared to traditional wooden formwork, the Bauframe and Bauframe Alu systems allow to save time and money.

3. SYSTEM OVERVIEW.

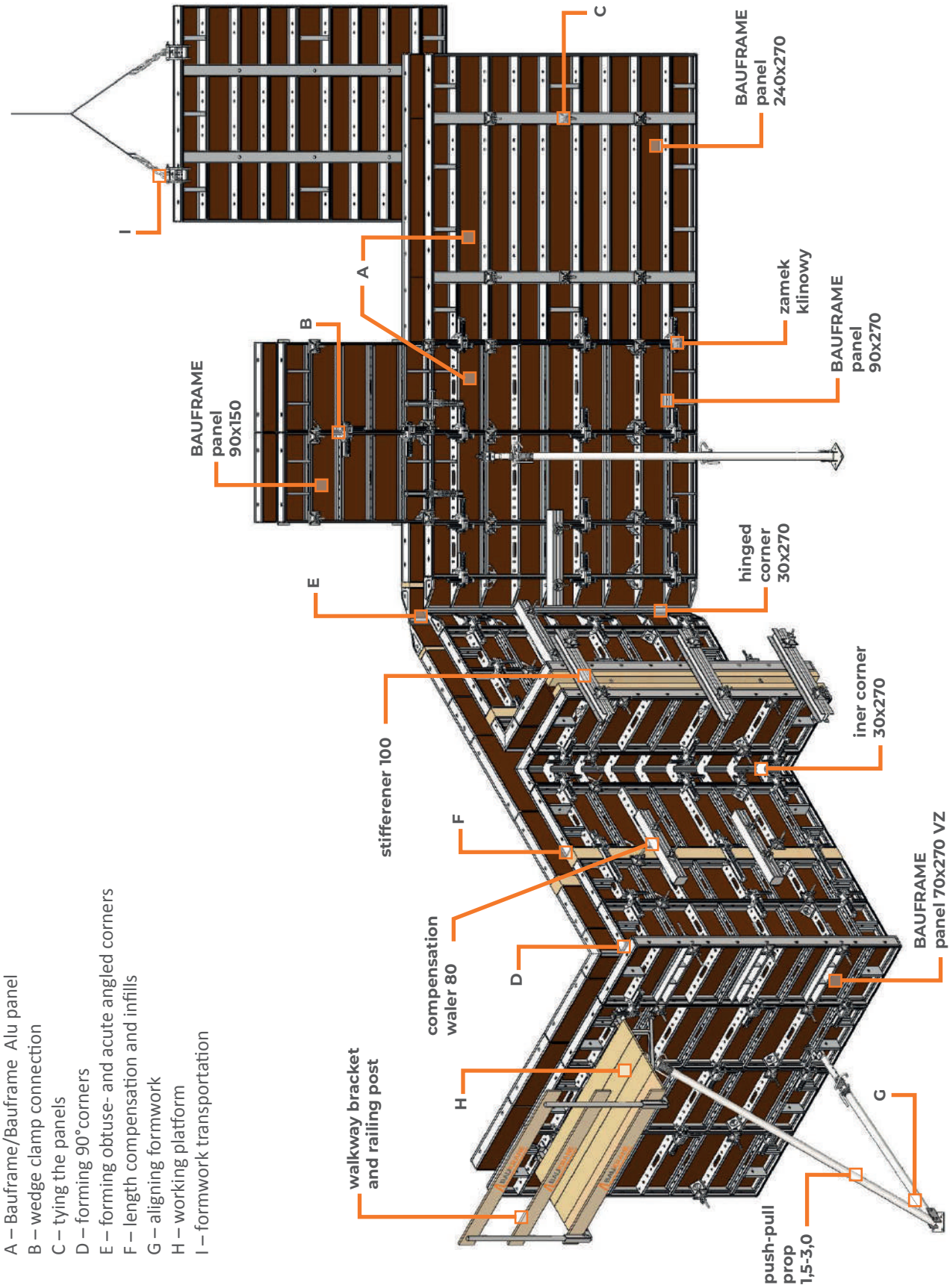

A – Bauframe/Bauframe Alu panel
B – wedge clamp connection
C – tying the panels
D – forming 90°corners
E – forming obtuse- and acute angled corners
F – length compensation and infills
G – aligning formwork
H – working platform
I – formwork transportation

4. BASIC AND ADDITIONAL ACCESSORIES.

1. Panels: The Bauframe and Bauframe Alu panels are basic elements of the system. They are used to erect formwork during all kinds of works. These panels can work both horizontally and vertically.

DRAWING	DESCRIPTION	CODE	WEIGHT [kg]
Panels h=300cm	**BAUFRAME panel 240x300**	7241240300	344,85
	BAUFRAME panel 180x300	7241180300	275,23
Steel panels	**BAUFRAME panel 120x300**	7241120300	175,69
Widths: 25, 30, 45, 50, 55, 60, 65,	**BAUFRAME panel 90x300 VZ**	7241190300	140,48
70, 75 i 90cm	**BAUFRAME panel 90x300**	7241090300	90,45
	BAUFRAME panel 75x300	7241075300	80,10
Aluminium panels	**BAUFRAME panel 70x300 VZ**	7241070300	113,40
Widths: 25, 30, 35, 40, 45, 50, 55,	**BAUFRAME panel 65x300**	7241065300	73,42
60, 65, 70, 75, 80, 85 i 90cm	**BAUFRAME panel 60x300**	7241060300	70,00
	BAUFRAME panel 55x300	7241055300	66,74
	BAUFRAME panel 50x300	7241050300	63,32
	BAUFRAME panel 45x300	7241045300	57,45
	BAUFRAME panel 30x300	7241030300	49,32
	BAUFRAME panel 25x300	7241025300	45,90
	BAUFRAME ALU panel 90x300	7242090300	62,69
	BAUFRAME ALU panel 85x300	7242085300	59,36
	BAUFRAME ALU panel 80x300	7242080300	56,80
	BAUFRAME ALU panel 75x300	7242075300	54,24
	BAUFRAME ALU panel 70x300 VZ	7242170300	75,38
	BAUFRAME ALU panel 70x300	7242070300	50,92
	BAUFRAME ALU panel 65x300	7242065300	48,36
	BAUFRAME ALU panel 60x300	7242060300	45,80
	BAUFRAME ALU panel 55x300	7242055300	43,31
	BAUFRAME ALU panel 50x300	7242050300	40,75
	BAUFRAME ALU panel 45x300	7242045300	38,19
	BAUFRAME ALU panel 40x300	7242040300	35,70
	BAUFRAME ALU panel 35x300	7242035300	33,15
	BAUFRAME ALU panel 30x300	7242030300	30,81
	BAUFRAME ALU panel 25x300	7242025300	28,63

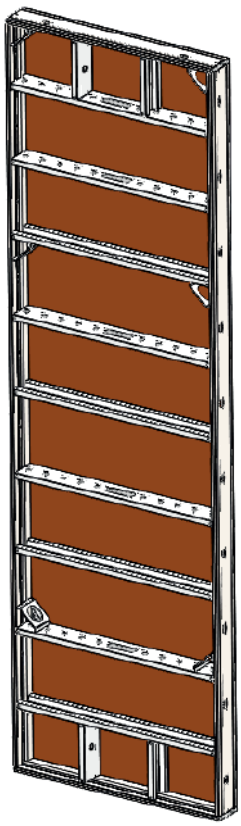

DRAWING	DESCRIPTION	CODE	WEIGHT [kg]
Panels h=270cm	**BAUFRAME panel 240x270**	7241240270	302,58
	BAUFRAME panel 180x270	7241180270	248,52
Steel panels	**BAUFRAME panel 120x270**	7241120270	157,05
Widths: 25, 30, 45, 50, 55, 60, 65,	**BAUFRAME panel 90x270 VZ**	7241190270	124,34
70, 75, 90, 120, 180 i 240cm	**BAUFRAME panel 90x270**	7241090270	82,11
	BAUFRAME panel 75x270	7241075270	71,59
Aluminium panels	**BAUFRAME panel 70x270 VZ**	7241070270	100,05
Widths: 25, 30, 35, 40, 45, 50, 55,	**BAUFRAME panel 65x270**	7241065270	65,52
60, 65, 70, 75, 80, 85 i 90cm	**BAUFRAME panel 60x270**	7241060270	62,41
	BAUFRAME panel 55x270	7241055270	59,43
	BAUFRAME panel 50x270	7241050270	56,34
	BAUFRAME panel 45x270	7241045270	51,88
	BAUFRAME panel 30x270	7241030270	43,47
	BAUFRAME panel 25x270	7241025270	40,38
	BAUFRAME ALU panel 90x270	7242090270	56,72
	BAUFRAME ALU panel 85x270	7242085270	53,62
	BAUFRAME ALU panel 80x270	7242080270	51,30
	BAUFRAME ALU panel 75x270	7242075270	49,00
	BAUFRAME ALU panel 70x270 VZ	7221170270	67,02
	BAUFRAME ALU panel 70x270	7242070270	45,89
	BAUFRAME ALU panel 65x270	7242065270	43,57
	BAUFRAME ALU panel 60x270	7242060270	41,25
	BAUFRAME ALU panel 55x270	7242055270	39,00
	BAUFRAME ALU panel 50x270	7242050270	36,67
	BAUFRAME ALU panel 45x270	7242045270	34,35
	BAUFRAME ALU panel 40x270	7242040270	32,09
	BAUFRAME ALU panel 35x270	7242035270	29,79
	BAUFRAME ALU panel 30x270	7242030270	27,66
	BAUFRAME ALU panel 25x270	7242025270	26,70

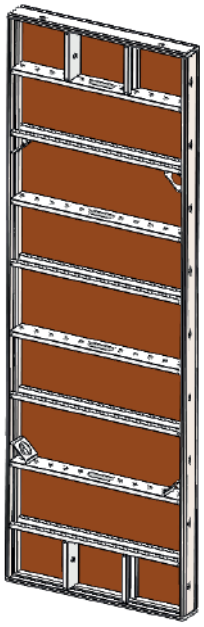

Panels h=150cm	**BAUFRAME panel 90x150 VZ**	7241190150	71,96
	BAUFRAME panel 90x150	7241090150	50,67
Steel panels	**BAUFRAME panel 75x150**	7241075150	43,82
Widths: 25, 30, 45, 50, 55, 60, 65,	**BAUFRAME panel 70x150 VZ**	7241070150	57,72
70, 75, 90, 120, 180 i 240cm	**BAUFRAME panel 65x150**	7241065150	40,18
	BAUFRAME panel 60x150	7241060150	38,34
Aluminium panels	**BAUFRAME panel 55x150**	7241055150	36,54
Widths: 25, 30, 35, 40, 45, 50, 55,	**BAUFRAME panel 50x150**	7241050150	34,69
60, 65, 70, 75, 80, 85 i 90cm	**BAUFRAME panel 45x150**	7241045150	31,50
	BAUFRAME panel 30x150	7241030150	26,40
	BAUFRAME panel 25x150	7241025150	24,55
	BAUFRAME ALU panel 90x150	7242090150	35,47
	BAUFRAME ALU panel 75x150	7242075150	30,77
	BAUFRAME ALU panel 70x150 VZ	7242170150	39,85
	BAUFRAME ALU panel 65x150	7242065150	28,14
	BAUFRAME ALU panel 60x150	7242060150	26,90
	BAUFRAME ALU panel 55x150	7242055150	25,67
	BAUFRAME ALU panel 50x150	7242050150	24,38
	BAUFRAME ALU panel 45x150	7242045150	22,25
	BAUFRAME ALU panel 30x150	7242030150	18,95
	BAUFRAME ALU panel 25x150	7242025150	17,85

DRAWING	DESCRIPTION	CODE	WEIGHT [kg]
Panels h=90cm			
	BAUFRAME panel 90x90 VZ	7241190090	51,68
Steel panels	**BAUFRAME panel 90x90**	7241009090	35,05
Widths: 25, 30, 45, 50, 55, 60, 65, 70, 75 i 90cm	**BAUFRAME panel 75x90**	7241007590	29,97
	BAUFRAME panel 70x90 SVZ	7241070090	40,46
	BAUFRAME panel 65x90	7241006590	27,49
	BAUFRAME panel 60x90	7241006090	26,27
	BAUFRAME panel 55x90	7241005590	25,07
	BAUFRAME panel 50x90	7241005090	23,85
	BAUFRAME panel 45x90	7241004590	21,13
	BAUFRAME panel 30x90	7241003090	17,71
	BAUFRAME panel 25x90	7241002590	16,48

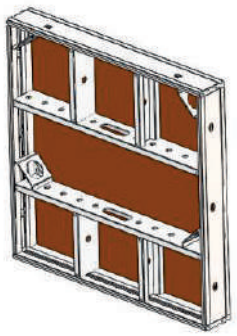

The 90 cm high panels are available in a steel version only. Due to their weight and dimensions they are particularly useful when erecting foundation formwork and height extensions.

2. Corners

DRAWING	DESCRIPTION	CODE	WEIGHT [kg]
Outer corners			
Heights: 90, 150, 270 i 300cm			
	BAUFRAME outer corner BAUFRAME 0x300	7222B00300	31,10
	BAUFRAME outer corner BAUFRAME 0x270	7222B00270	28,02
	BAUFRAME outer corner BAUFRAME 0x150	7241400150	15,68
	BAUFRAME outer corner BAUFRAME 0x90	7241400090	9,52

Used from the outside of the 90° corners and during column formation.

Available in a steel version only.

Inner corners			
Heights: 90, 150, 270 i 300cm	**Steel corners:**		
	BAUFRAME inner corner BAUFRAME 30x30x300	7241330300	81,20
	BAUFRAME inner corner BAUFRAME 30x30x270	7222B30270	72,20
	BAUFRAME inner corner BAUFRAME 30x30x150	7241330150	42,46
	BAUFRAME inner corner BAUFRAME 30x30x90	7241330090	27,58
	Aluminium corners:		
	BAUFRAME ALU inner corner 30x30x300	7242230300	44,74
	BAUFRAME ALU inner corner 30x30x270	7243030270	40,26
	BAUFRAME ALU inner corner 30x30x150	7242230150	23,36

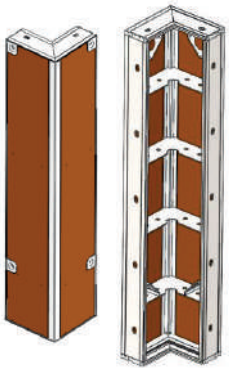

Used to form L-, T- and X-shaped corners at the right angle. Equipped with holes for tie rods.

3. Hinged corners: available in a steel version only

DRAWING	DESCRIPTION	CODE	WEIGHT [kg]
Hinged corners 15x15: Heights: 90, 150, 270 i 300cm			
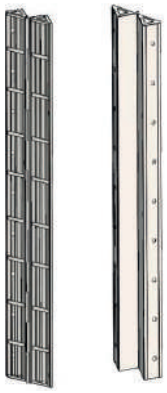	**BAUFRAME hinged corner 15x15x300**	7241515300	74,80
	BAUFRAME hinged corner 15x15x270	7241515270	67,36
	BAUFRAME hinged corner 15x15x150	7241515150	37,62
	BAUFRAME hinged corner 15x15x90	7241515090	22,80
	Steel corners are used to form obtuse- and acute-angled, both inner and outer corners. Equipped with a 15 cm wide wing.		
Hinged corners 30x30 Heights: 90, 150, 270 i 300cm			
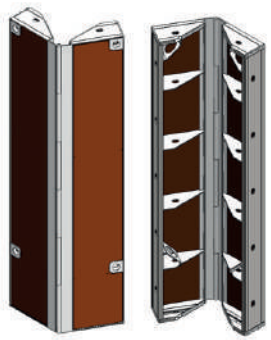	**BAUFRAME hinged corner 30x30x300**	7241530300	92,42
	BAUFRAME hinged corner 30x30x270	7241530270	82,35
	BAUFRAME hinged corner 30x30x150	7241530150	47,83
	BAUFRAME hinged corner 30x30x90	7241530090	30,58
	Equipped with plywood and holes for tie rods. Used to form obtuse- and acute-angled, both inner and outer corners. Fitted with a 30 cm wide wing.		

4. Infills

DRAWING	DESCRIPTION	CODE	WEIGHT [kg]
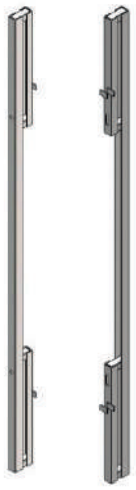	**Infill 5x300**	7270005300	21,45
	Infill 5x270	7270005270	18,92
	Infill 5x150	7270005150	11,66
	Steel compensating elements, used to adjust wall dimensions in 5 cm increments. Mostly used when forming corners. Double connection of infills is allowed.		

5. Tying components

DRAWING	DESCRIPTION	CODE	WEIGHT [kg]
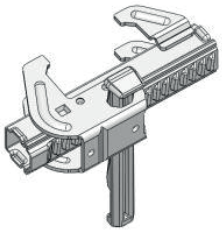 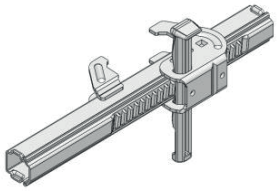	**Baukrane wedge clamp** **Baukrane UNI wedge clamp** A properly hammered in clamp connects and aligns the panels at the same time, providing a tight and tensile resistant connection. To be mounted both horizontally and vertically. The clamps join the panels with wooden or steel infills.	7271000002 7271000003	4,20 5,50
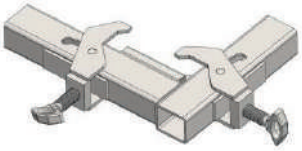	**Corner clamp** Specially designed to fit the Bauframe system, used to connect panels in the corners.	7271000090	6,20
Lengths: 12 cm, 20 cm 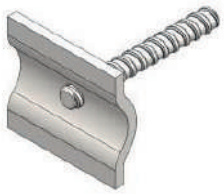	**Centering tension bolt 120** Used as an alternative way of connecting panels through holes in the outer profiles. With a centering nut it aligns the panels and creates a tear-resistant connection.	7270000120	0,79
Lengths: 30cm, 50cm 	**Waler spanner 30** **Waler spanner 50** Used to mount compensation walers.	7270000030 7270000050	0,71 1,02
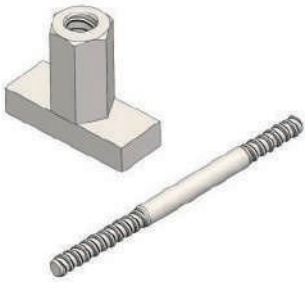	**MP bolt** **MP nut** Used to join Bauframe VZ panels and Bauframe Alu panels when forming columns. To be used with with articulated nuts 120.	7270000002 727100R001	0,53 0,46

DRAWING	DESCRIPTION	CODE	WEIGHT [kg]
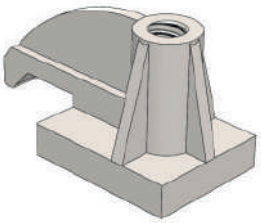	**Corner bracket VZ** Used to connect universal Bauframe VZ and Bauframe Alu VZ panels with standard panels when forming columns. The bracket allows to use VZ panels when forming 90° corners.	7271100001	0,93
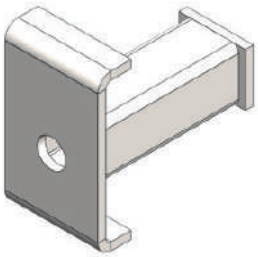	**Edge connector** Useful when connecting panels without holes for tie rods or forming stopend formwork	7270000007	1,46
Lengths: 75, 100, 150, 200, 250 i 300cm 	**Tie rod DW-15** Main formwork element transmitting tensile forces from the pressure of the fresh concrete mix. Used to tie opposite panels with a flanged wing nut Ø100 and articulated nut 113x113 and Ø120. It transmits tensile forces with a maximum value of 90kN.	7270015075 7270015100 7270015150 7270115200 7270015250 7270015300	1,50kg/lm
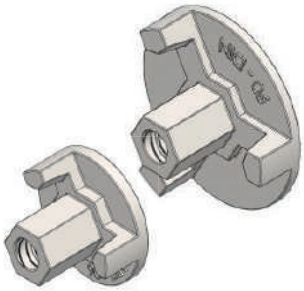	**Nut Ø70** **Nut Ø 100** They are compatible with centering tie rods, MP bolts, tie brackets and Dywidag-15 tie rods. They are to be connected with the accessories only. Do not use them to connect opposite panels. They can be operated with a steel bar, hammer or hexagonal spanner.	7000000070 7000000100	0,46 0,64
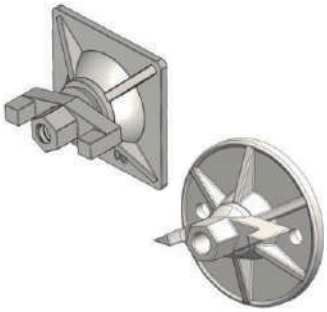	**Square flange wing nut 113x113** **Forged articulated nut Ø120** Used with centering tension bolts and stiffeners.	7000120120 7000120000	1,20 2,00

DRAWING	DESCRIPTION	CODE	WEIGHT [kg]
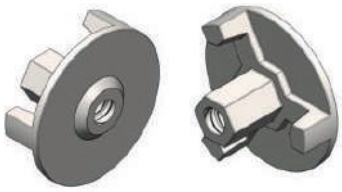	**Centering nut** Used with centering tension bolts and stiffeners.	7460000058	0,67
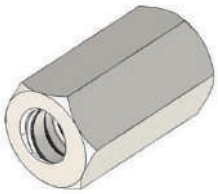	**Hexagon nut 50** Used to attach accessories when a connection with flanged wing nuts is not possible. In special cases, it may be used to connect tie rods.	7270010650	0,23

6. Compensation and straightening element

DRAWING	DESCRIPTION	CODE	WEIGHT [kg]
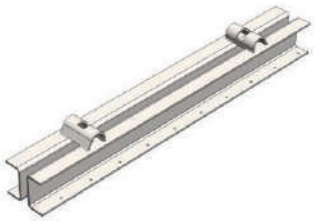	**Stiffener 100** Used to stiffen infills between panels, creating height extensions and stopend formwork. Equipped with holes for tie rods. Fixed with the use of a waler spanner and centering nuts.	7270200100	15,00
Lengths: 80, 120, 150, 200, 260cm 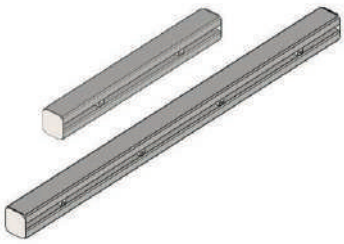	**Compensation waler 80** **Compensation waler 120** **Compensation waler 150** **Compensation waler 200** **Compensation waler 260** Used to connect accessories when a connection with flang wing nuts is not possible. In special cases, it may be used to connect tie rods.	7270100080 7270100120 7270100150 7270100200 7270100260	10,60 15,62 20,64 25,66 30,67

7. Push pull props

DRAWING	DESCRIPTION	CODE	WEIGHT [kg]
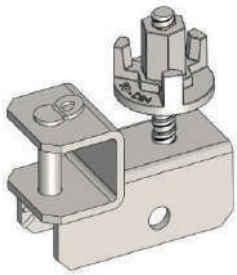	**Push pull prop head** This component is used to properly fix push pull props to the frame of formwork panels. It also allows to create a connection with a vertical or horizontal element of the frame. Equipped with a bolt and centering nut.	7271000300	2,08
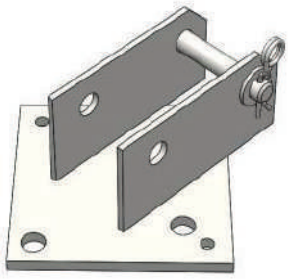	**Prop base plate** Used to properly fix one or two props to the ground. Equipped with one bolt.	7270000007	1,46
	**Push pull prop 0.9-1.3** **Push pull prop 1.6-2.4** **Push pull prop 2.8-4.7** Used to fully align the formwork. The symbols of the prop names indicate the adjustment ranges of the prop lengths. Equipped with a nut and locking pin. To be fixed to the base plate and prop head with a bolt. The props do not transmit the loads caused by the pressure of the fresh concrete mix.	7271080130 7271160240 7271280470	8,22 12,83 21,18
	**Bolt fi 16-96** This element connects push pull props with prop heads and base plates.	7270000005	0,18

8. Listwy radialne

DRAWING	DESCRIPTION	CODE	WEIGHT [kg]
	**Radial slat 25x300**	7250025300	40,97
	Radial slat 25x270	7250025270	36,84
	Radial slat 25x150	7250025150	24,19
	Radial slat 20x300	7250020300	38,17
	Radial slat 20x270	7250020270	34,74
	Radial slat 20x150	7250020150	21,02
	Radial slat 15x300	7250015300	35,83
	Radial slat 15x270	7250015270	32,63
	Radial slat 15x150	7250015150	19,85
	Placed between standard panels, they allow to erect a radial wall.		
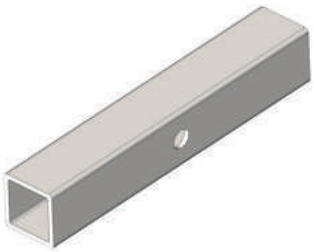	**Tie rod beam** It complements the radial slat, allowing to transmit tensile forces transferred by tie rods and nuts.	7270000008	2,64
	**Bauframe transport hook** Used for safe transport of one or sets of panels. Loading bearing capacity is 12KN.	7271000000	8,06
	**Net baskets** Used to stack and transport small formwork accessories safely.	7270000900	76,00

9. Working platform

DRAWING	DESCRIPTION	CODE	WEIGHT [kg]
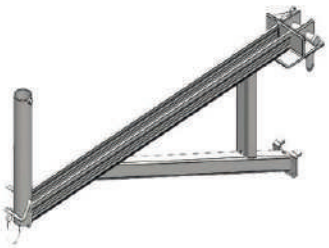	**Walkway bracket** Used to build a safe and temporary working platform. Fixed to the vertical or horizontal frame profile. Equipped with a safety bolt applied when mounting the walkway bracket to the vertical profile.	7400000008	10,50
	**Railing post** Placed in a dedicated socket in the bracket, allows to assembly barriers of the working platform.	7410000005	3,98
	**Toeboard attachement** Fixed to the bottom part of the railing post to attach a toeboard.	7400000020	0,45

10. Panel plug

DRAWING	DESCRIPTION	CODE	WEIGHT [kg]
	**Bauframe plug** It stops the fresh concrete mix from escaping through unused holes. Equipped with a die stamping which makes it easier to remove it from the panel.	7000000013	0,01

5. PLANNING AND PREPARATION FOR ASSEMBLY.

5.1 BASIC INFORMATION.

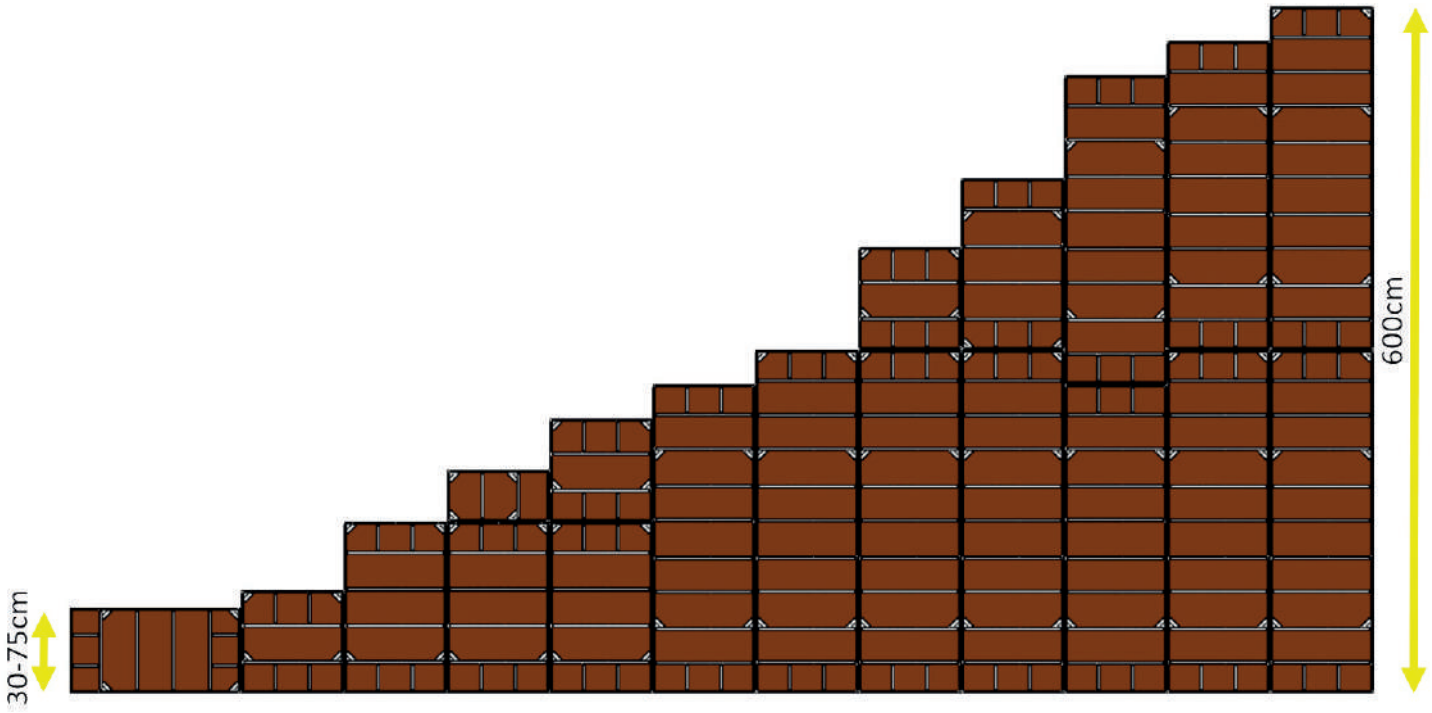

The Bauframe and Bauframe Alu system panels may be installed both in vertical and horizontal positions. Thanks to a wide range of dimensions, the formwork height can be adjusted to any object height.

IMPORTANT! Permissible fresh concrete mix pressure on the Bauframe and Bauframe Alu panels is 60kN/m²!

When using extensions, the height of formwork is unlimited. It is important, however, to pay attention to the speed of concreting and the consistency of the concrete mix, as the permissible fresh concrete pressure is 60kN/m².

The design of the side profile of the frame and the wedge clamp allows to connect panels with a shift without using additional elements. It allows to adjust the formwork to any unevenness of the ground.

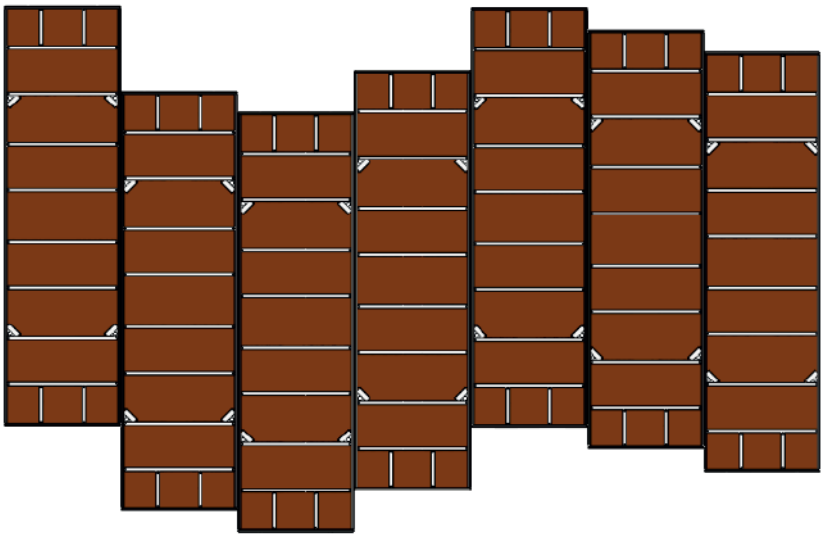

5.2 BAUFRAME PANELS.

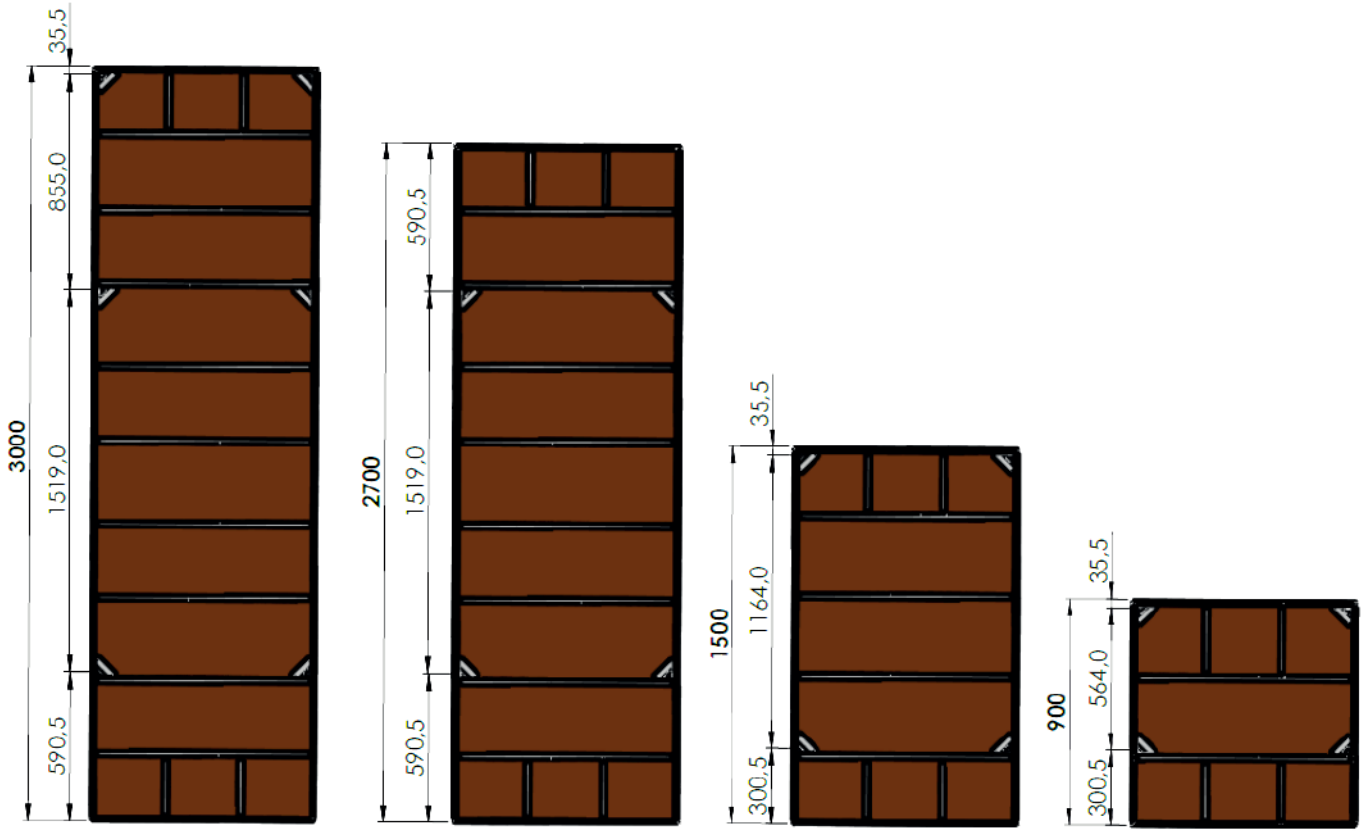

The Buaframe panels have been made of rigid steel profiles, the outer of which is 121 mm high and 20 mm wide. The welded steel frame has been protected against corrosion by hot dip galvanising. The shuttering skin is made of high quality 15 mm thick birch plywood with phenolic coating with a weight of 220g/cm². The edges of the plywood are protected by a shaped profile.

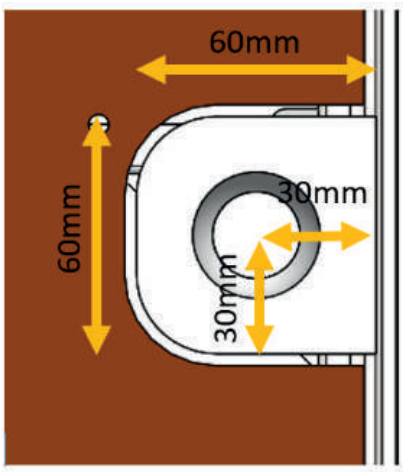

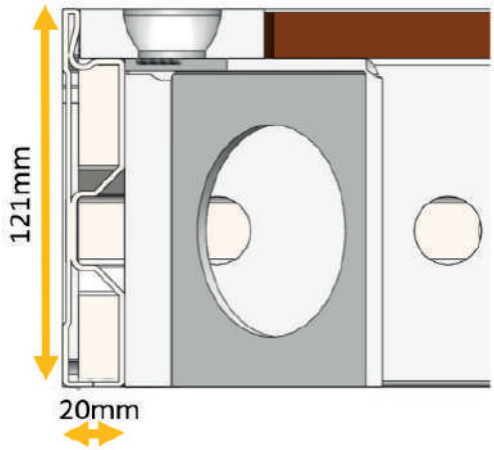

The steel panels have holes for tie rods in steel profiles of 60x60 mm and 16 mm thickness. They protect the shuttering skin of the panel from damage during assembly and disassembly of tie rods. It is easy to insert tie rods thanks to the parabolic shape of the socket.

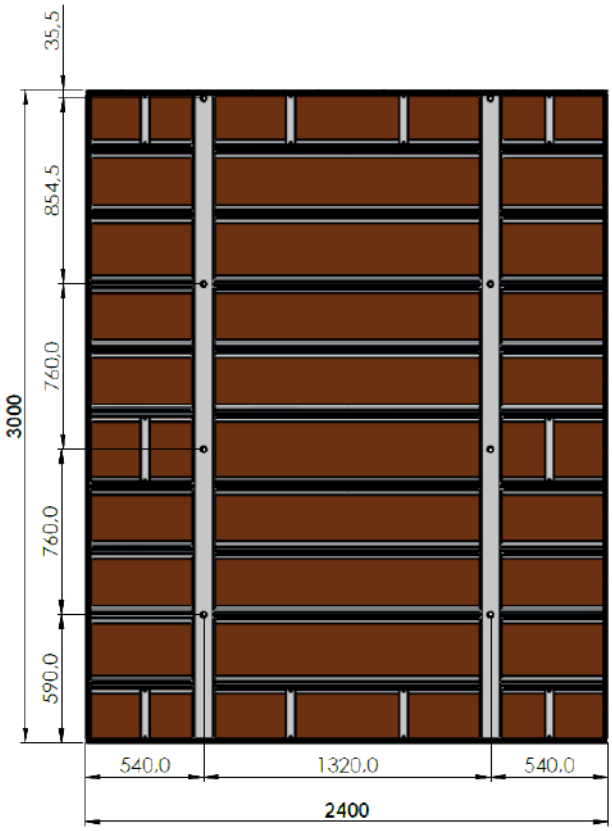

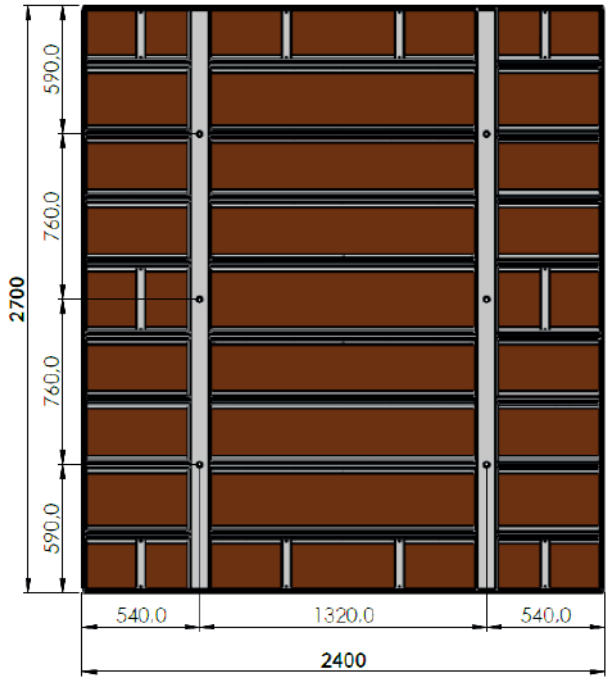

The large-size Bauframe XXL panels enable to erect large-area formwork of high visual qualities. They are only available in a steel version of the Bauframe system, with heights of 270 cm and 300 cm.

The universal multi-hole Bauframe VZ panels are useful when erecting rectangular columns. A higher number of holes for tie rods than in a standard panel allows to adjust the dimension of the formwork in 5 cm increments. Thanks to the VZ angle clamp, it is possible to connect VZ panels with standard panels, for example when forming rectangular corners.

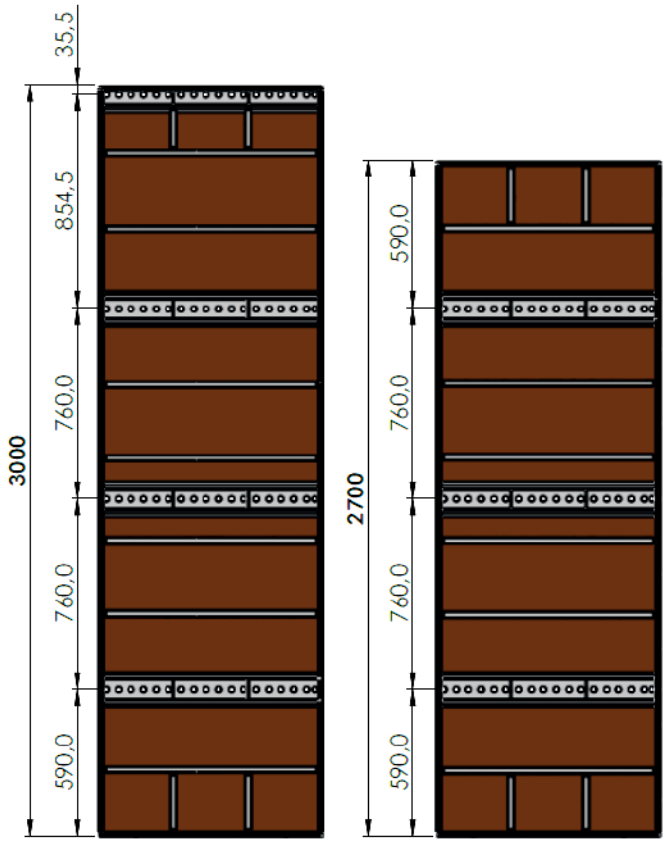

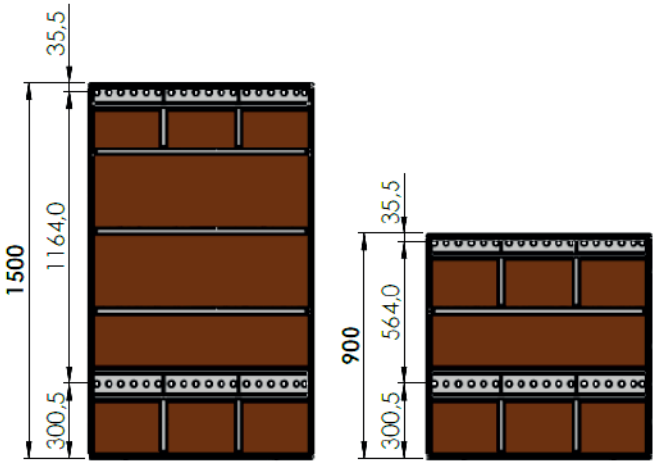

5.3 BAUFRAME ALU PANELS.

The height of tie rods in standard Bauframe Alu panels:

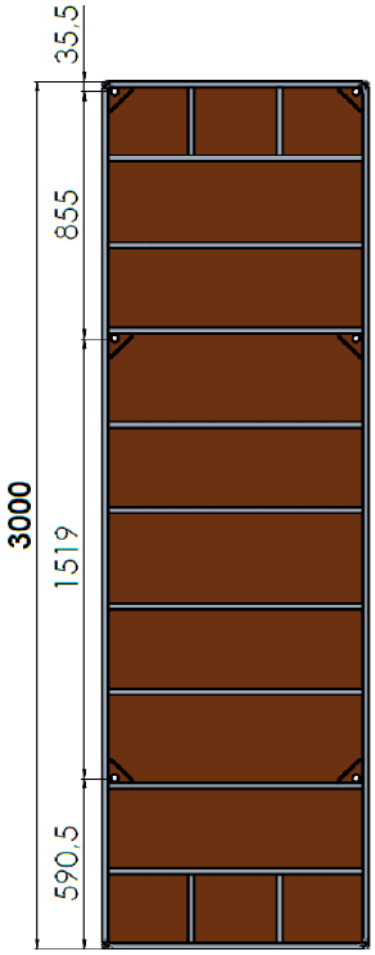

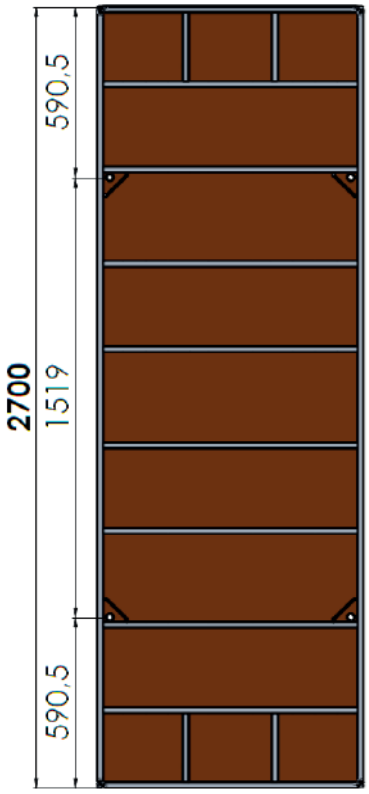

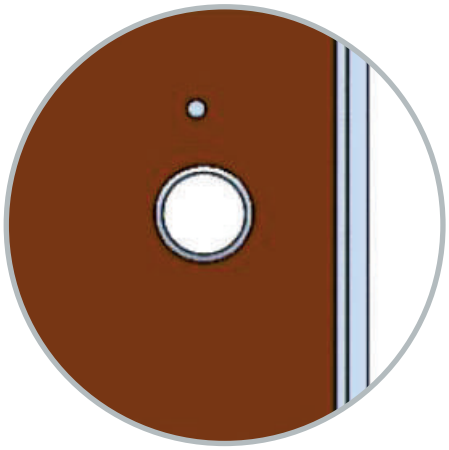

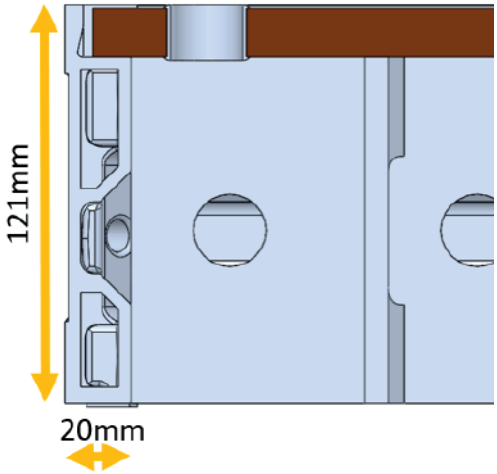

The Buaframe Alu panels have been made of rigid and hardened aluminium profiles, the outer of which is 121 mm high and 20 mm wide. The aluminium frame, thanks to its construction, is entirely compatible with its steel equivalent and may be used interchangeably. The shuttering skin is made of high quality 15 mm thick birch plywood with phenolic coating with a weight of 220g/cm^2. The edges of the plywood are protected by a shaped profile.

Aluminium panels, unlike steel panels, are equipped with through holes in the plywood, the edges of which have been protected with aluminium hoops. They have the same function as the profiles in the steel panel.

6. ASSEMBLY AND DISASSEMBLY.

6.1. BAUKRANE WEDGE CLAMP.

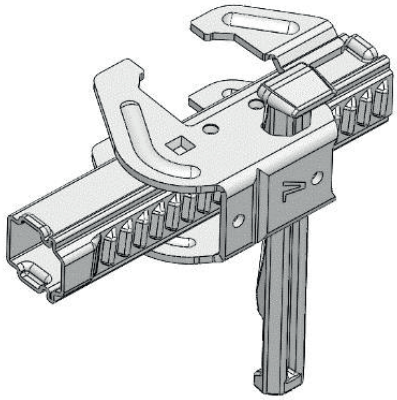

The tensile and compression-resistant connection of the panels is achieved by connecting the panels with the Baukrane wedge clamp. It allows the panels of the Bauframe and Bauframe Alu systems to be combined with a 13.5cm wide wooden infills.

The condition and proper fixing of the clamp should be checked every time before use.

6.2. ASSEMBLING WEDGE CLAMPS.

1.

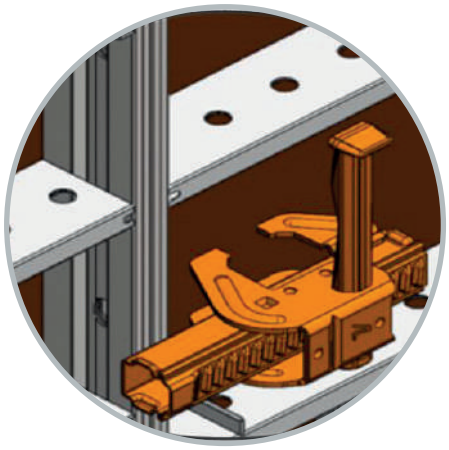

Place a wedge clamp between panels. The wedge clamp should be installed on the panel struts. The connection is then tensile resistant and additionally stiffened by the clamp body.

2.

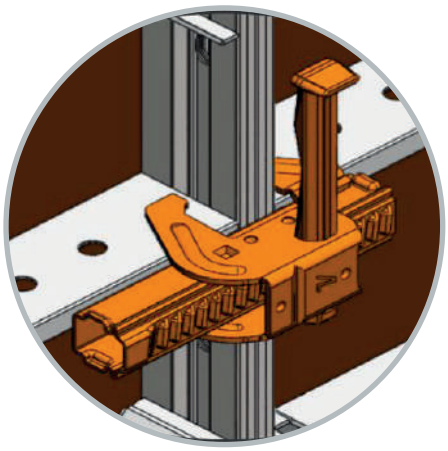

Press the clamp jaws to the panel and move the wedge to the profile part. Pre-lock the jaws.

3.

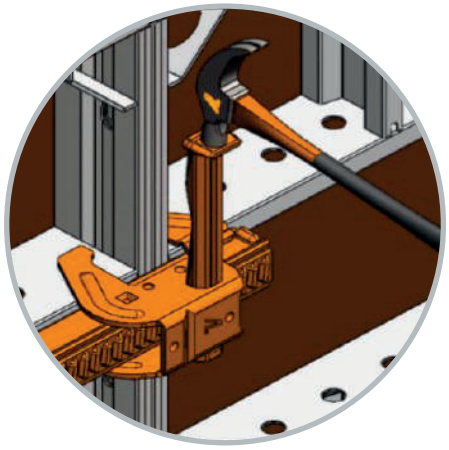

Hammer in the wedge to tighten the jaws to the panel profiles and tie the connection.

4.

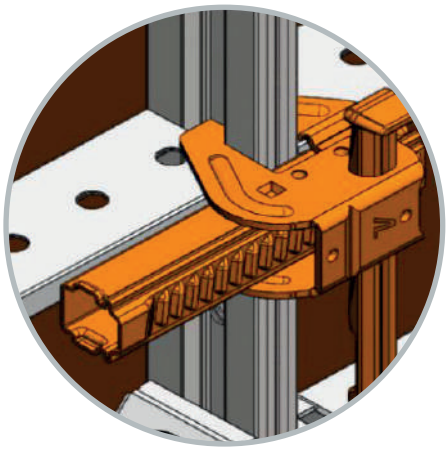

A properly blocked clamp creates a tight and tensile resistant connection. The design tensile strength of the Baukrane wedge clamps is 20kN. The clamp is disassembled in the reverse way to how it was installed.

The Baukrane wedge clamp and Baukrane UNI wedge clamp are used to securely connect the panels of the Bauframe, Bauframe Alu and Buaschal systems without any compensation elements.

Connection of Bauframe and Bauframe Alu panels

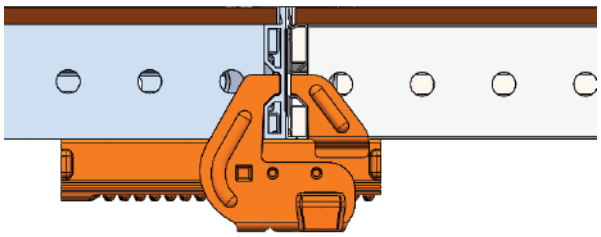

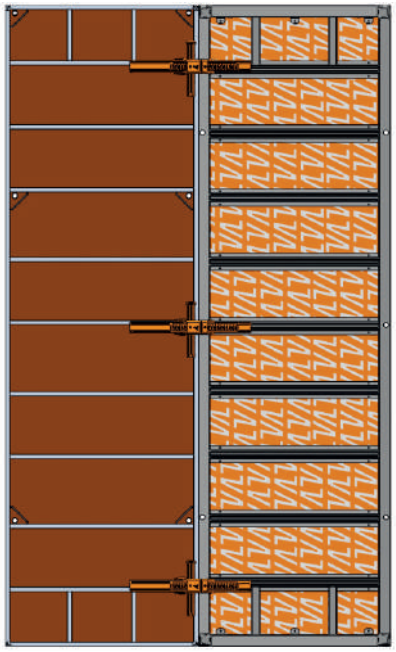

Connection of Bauframe and Bauschal panels

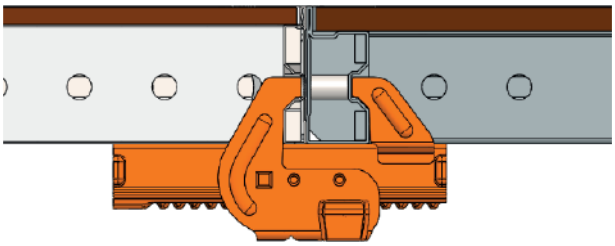

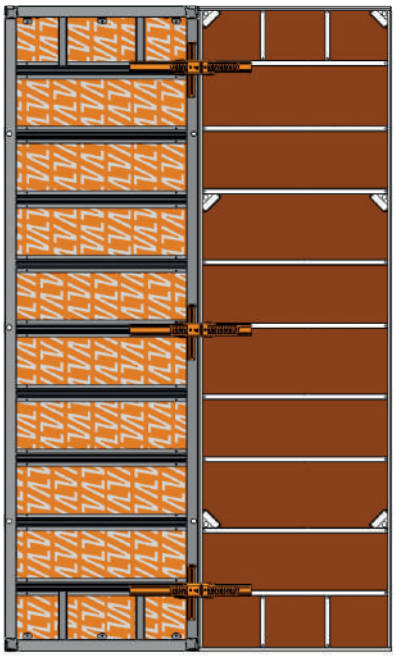

Connection of Bauschal Mammut and Bauframe XXL

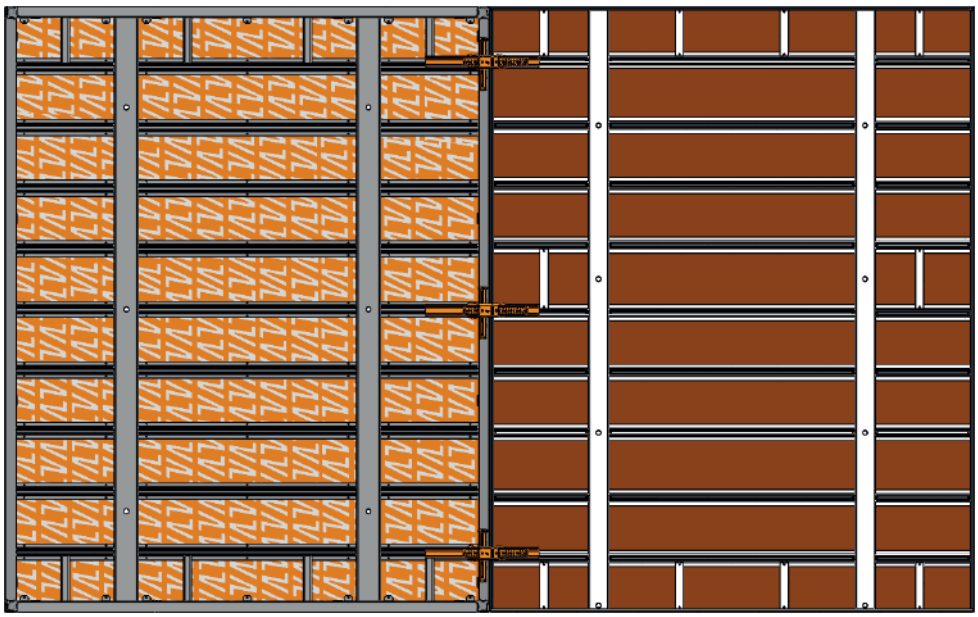

6.3. ARRANGEMENT OF WEDGE CLAMPS.

The 90 and 150 cm high panels
are connected with two wedge clamps.

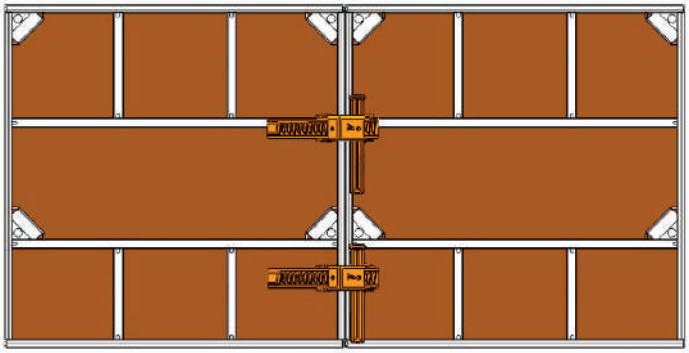

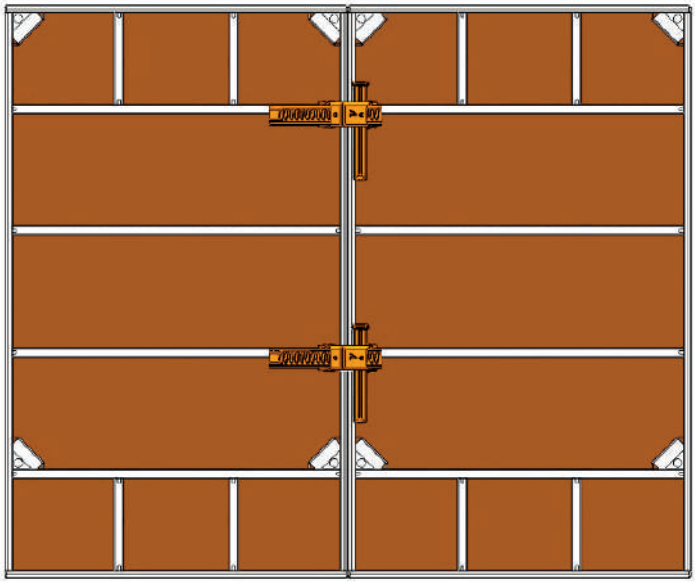

The panels of 270 and 300 cm high
are connected with three wedge clamps

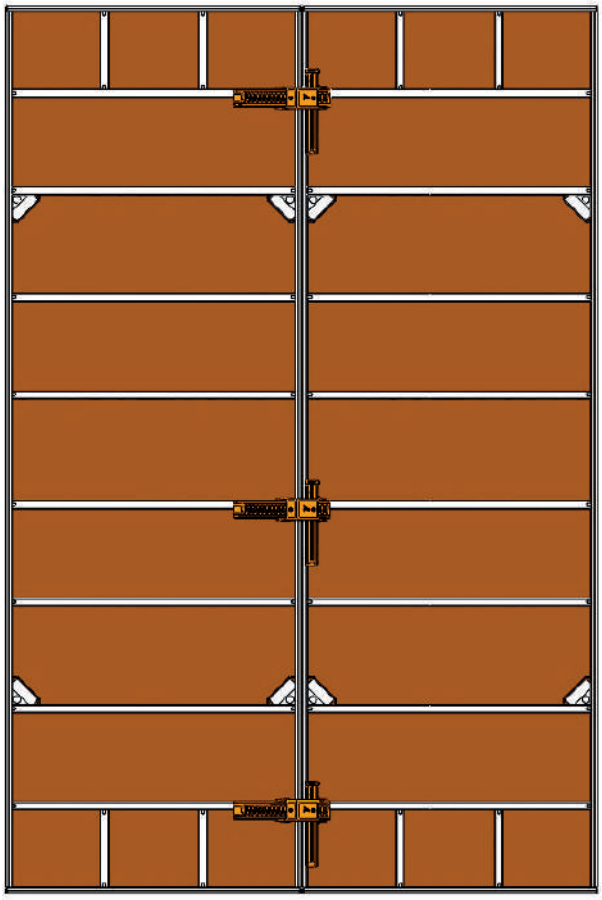

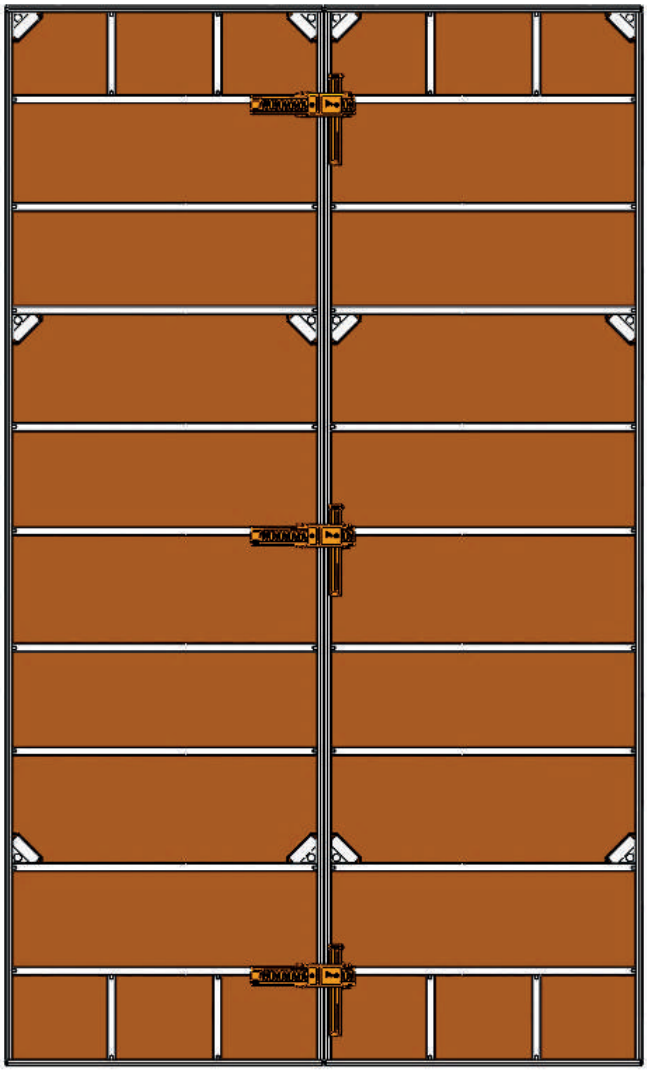

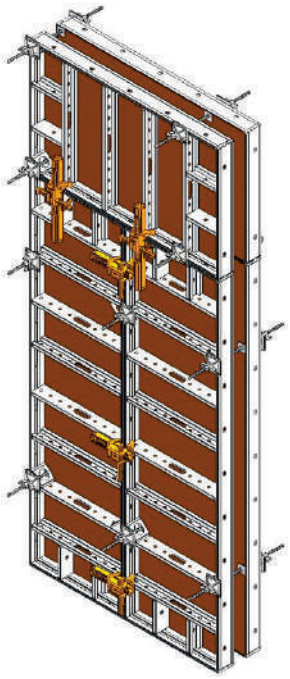

The height extension panels are connected in the same way as the lower panels. The 90 cm and 150 cm height extensions should be joined with 2 wedge clamps. The 270 cm and 300 cm height extensions should be joined with 3 clamps.

At every contact point of the elements, 1 wedge clamp per every joined element or per every 1 m of connection width is mounted, if the height extensions panels are placed in a horizontal position. When the height extension panels are positioned vertically, the UNI wedge clamp which clasps the panel struts, should be used.

In the case of wide contact points and high extensions (over 60 cm), the height extension should be additionally stiffened with a compensation waler of a suitable length.

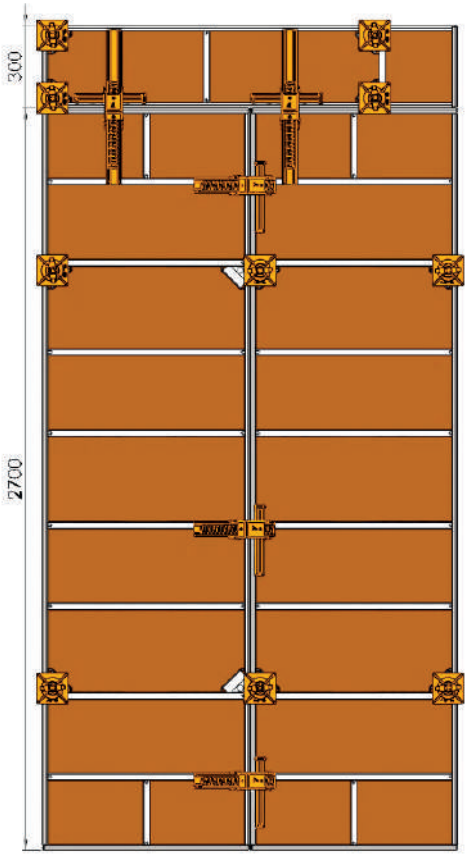

HEIGHT 300 cm

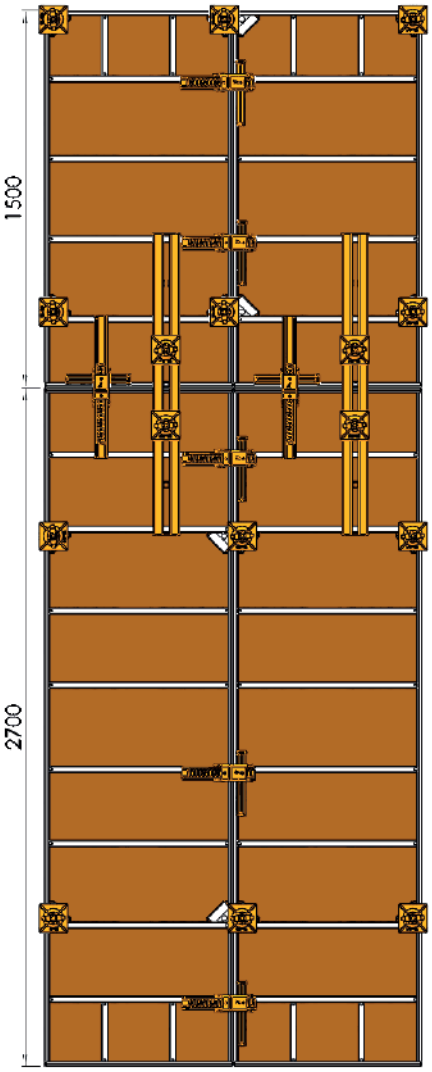

HEIGHT 420 cm

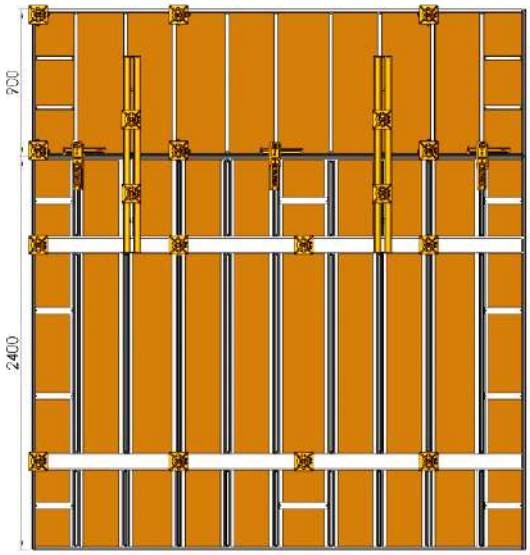

HEIGHT 330 cm

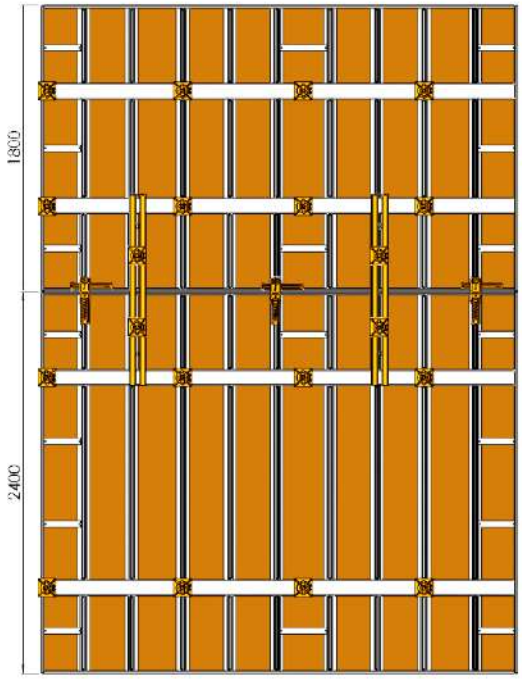

HEIGHT 420 cm

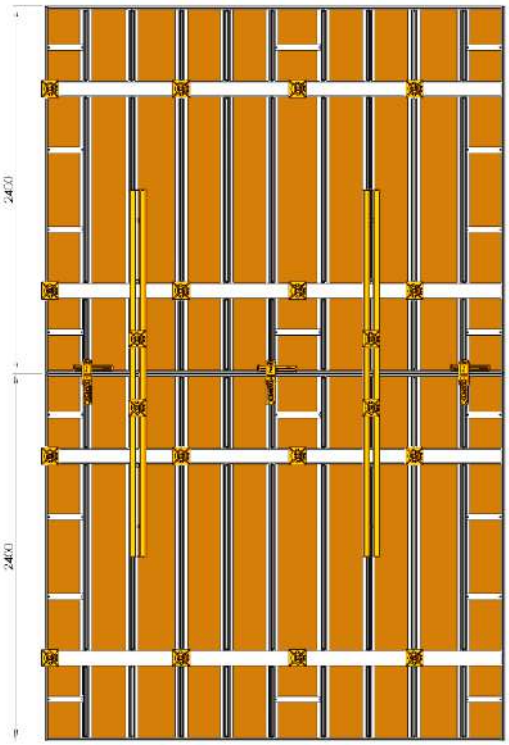

HEIGHT 420 cm

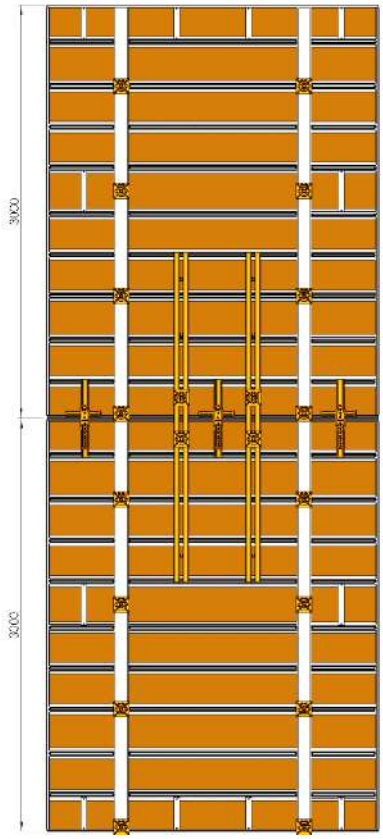

HEIGHT 600 cm

6.4 . TYING PANELS.

Every standard panel of the Bauframe and Bauframe Alu system, with the width of 90 cm, is equipped with 4 holes for tie rods. They are placed in a steel profile so that the plywood is protected from damage when mounting tie rods. This solution significantly extends the life span of the plywood and reduces the costs of using it. A similar function is served by aluminium hoops which cover the holes in the aluminium panels.

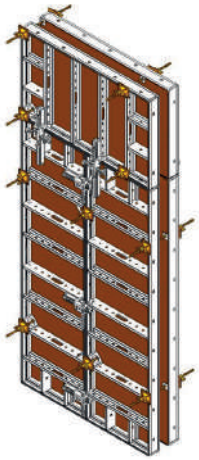

Tying the panels lying opposite to each other is conducted with the use of Dywidag-15 tie rods and articulated nuts. In order to connect the panels one hole needs to be chosen. The rest of the tie holes have to be sealed with the Baukrane plugs. One tie rod holds two adjacent panels simultaneously.

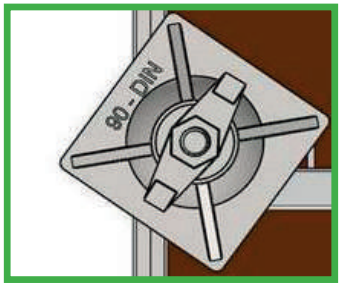

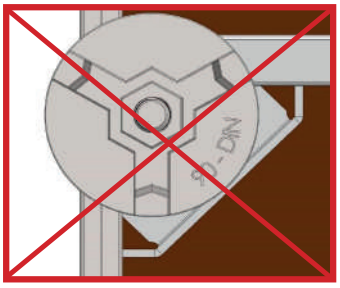

IMPORTANT! Do not use flanged wing nuts Ø70 and Ø100 to tie the panels! Only articulated nuts should be used for tying the panels!

The socket and tie hole in the Bauframe and Bauframe Alu panels allow to tie the panels with the tie rods placed at an angle to the surface of the plywood. The range of adjustment when using the articulated nut is 5 ° or 15 °, depending on the direction of the tie rod inclination.

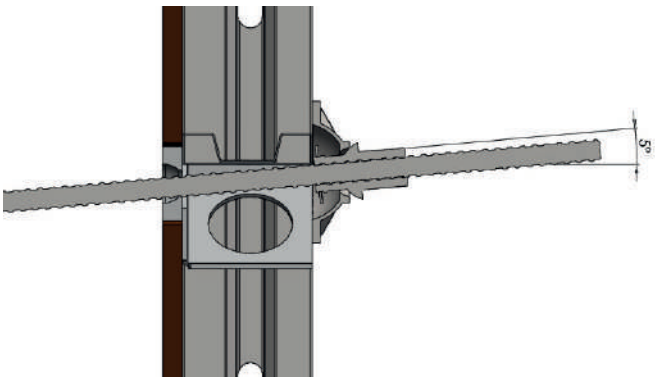

The tie rods installed at an angle to the surface of the plywood allow to erect walls of varying thickness along the length of the wall. The maximum angle obtained for the Bauframe and Bauframe Alu panels, when using articulated nuts, equals 5 °. This enables to change the thickness of the 2.7 m high wall at 48 cm.

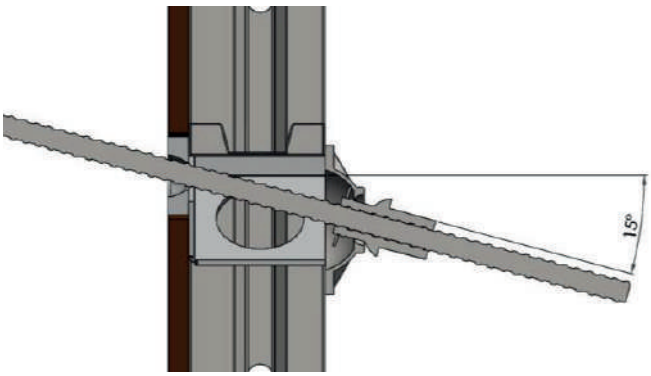

The arrangement of tie rods in the Bauframe and Bauframe Alu panels makes it easy to connect opposite panels of 270 cm and 300 cm height.

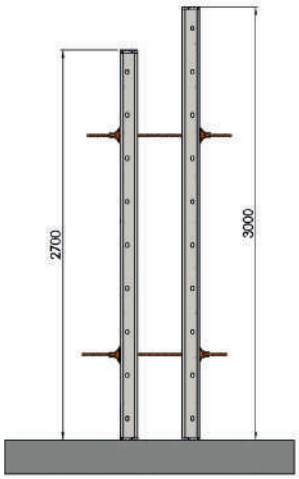

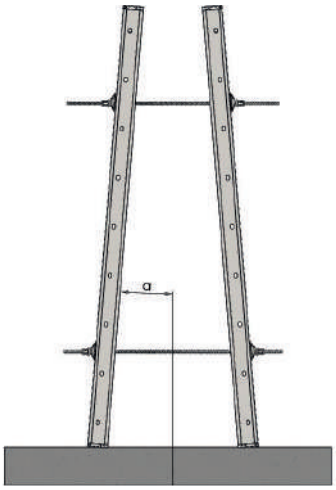

7. FORMING CORNERS.

7.1. 90° CORNERS

The basic element used to form 90° corners is the Baukrane inner corner, measuring 30x30 cm. The desired wall thickness is achieved by the right selection of panels forming corner.

The basic element used to form corners from the outside is the Baukrane outer corner. Its design allows it to be connected to the adjacent panels with the use of the Baukrane wedge clamp or, alternatively, with the centering tension bolt with a flanged wing nut Ø70.

Wooden or steel infills may be placed either on the outside or inside of the corner.

PANEL HEIGHT	NUMBER OF CLAMPS CONNECTING OUTER CORNERS
90cm	2x2
150cm	2x3
270cm	2x5
300cm	2x5

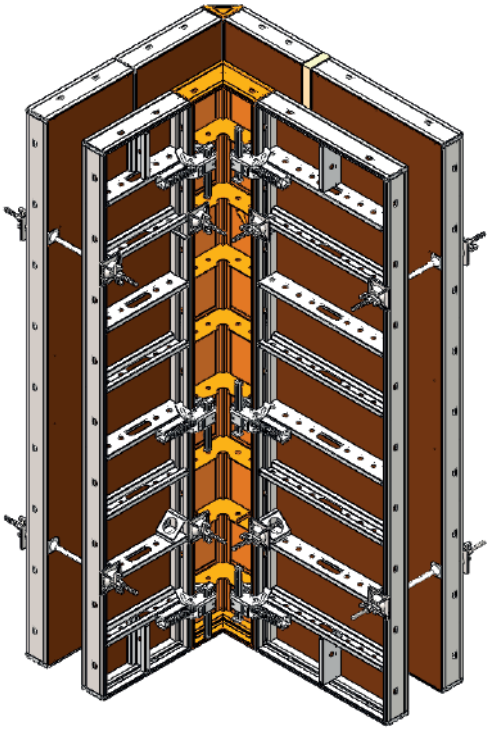

Examples of 90° corners formed with the use of outer corners:

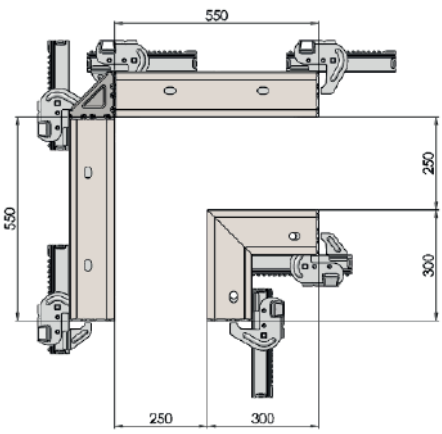

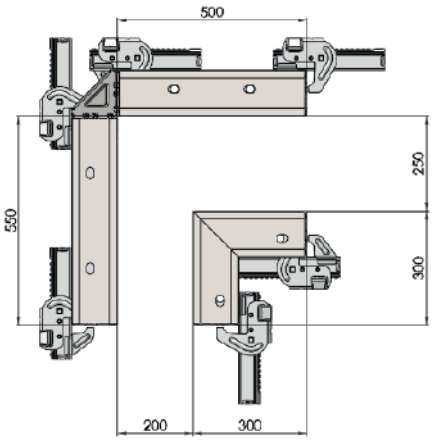

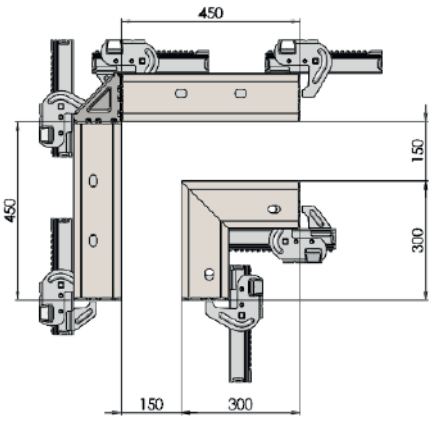

An alternative way to form a 90° corner from the outside is to use the multi-hole VZ panel. Use the VZ corner clamp to attach it to the standard panel.

The desired wall thickness is achieved by selecting the right hole in the VZ panel and passing through it the VZ bolt. The VZ 70 panel allows to obtain the corner with the wall thickness up to 20 cm, whereas the VZ 90 panel allows to obtain the wall thickness up to 40 cm, in 5 cm increments. In order to create a connection, an articulated nut of the tie rod must be used.

Wooden or steel infills may be placed either on the outside or inside of the corner.

90°corner made of 70VZ panel:

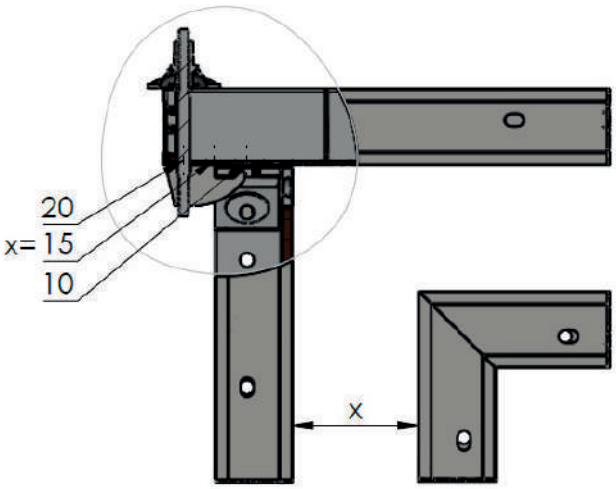

90°corner made of 90VZ panel:

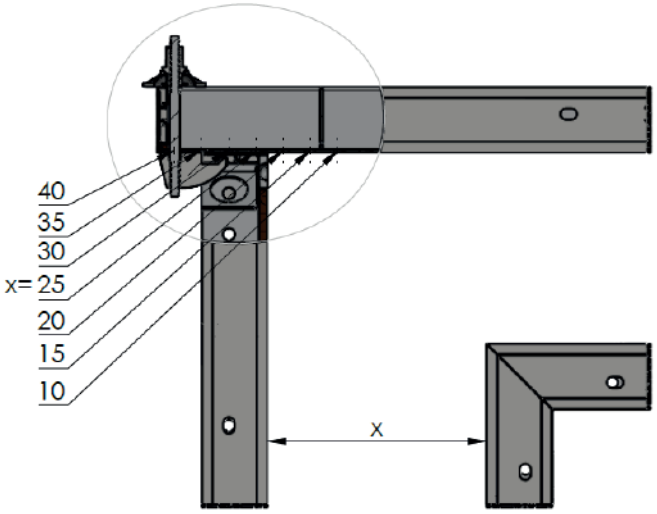

The 90° corners can also be formed with the use of two Buframe and Bauframe Alu panels, which are connected with corner clamps with a screw. In this case, it is important to keep a 5 or 10 cm overlap and to increase the number of corner clamps.

Due to increased pressure of the fresh concrete mix in the outside corner, it is vital to remember to increase the number of the corner clamps. The number of clamps required to form a corner should be taken from the table below.

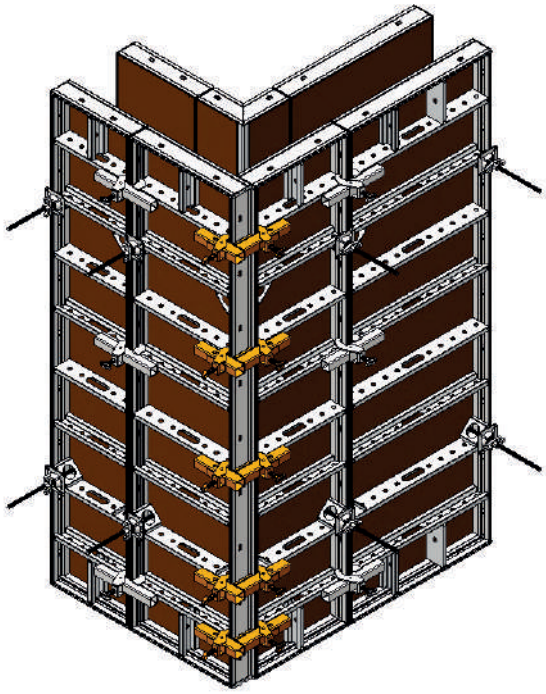

PANEL HEIGHTS	NUMBER OF CORNER CLAMPS
90cm	2
150cm	3
270cm	5
300cm	5

Examples of 90° corners formed with the use of corner clamps:

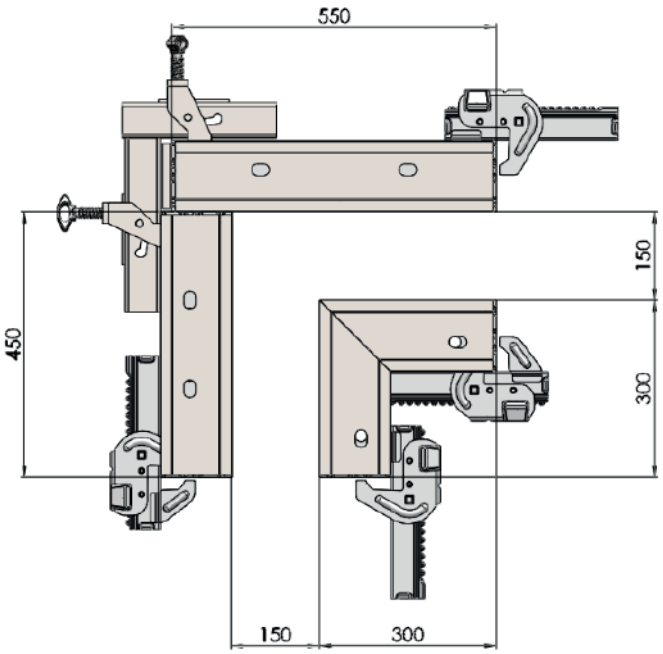

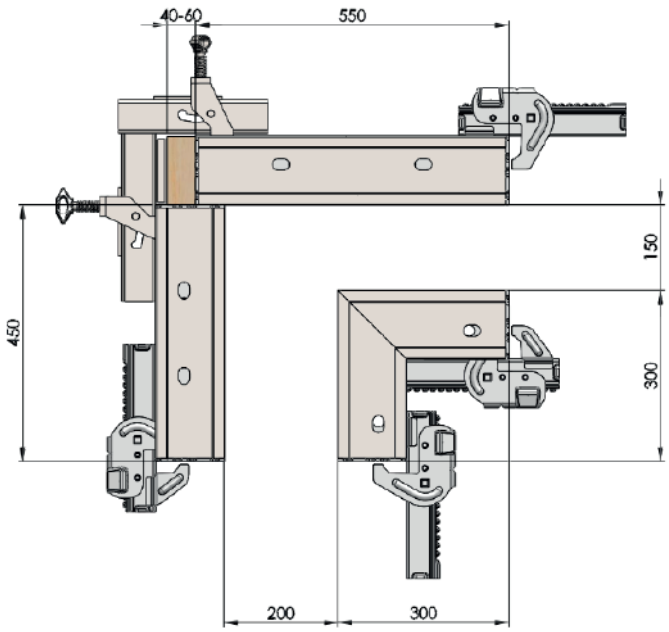

Using only inner corners with a wing of 30 cm length it is possible to form T- and X- shaped corners.

T-shaped wall connections are formed in a similar way to L-shaped wall connections. The required wall thickness is achieved by selecting appropriate outer panels and infills.

Wooden or steel compensation infills may be placed either on the outside or inside of the corner.

X-shaped corners are formed similarly to T-shaped corners. The required wall thickness is achieved by selecting appropriate panels or using infills.

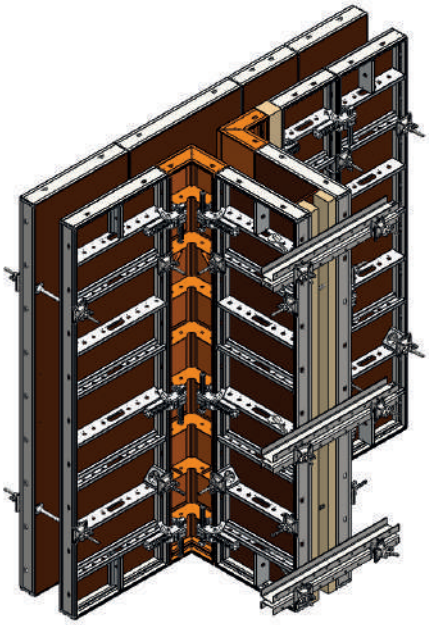

Examples of T-shaped corners:

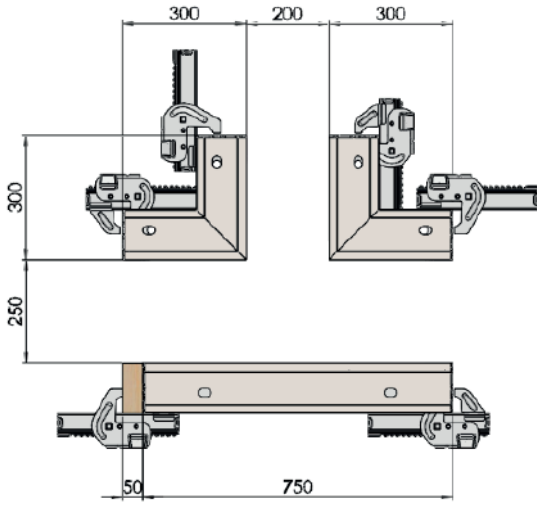

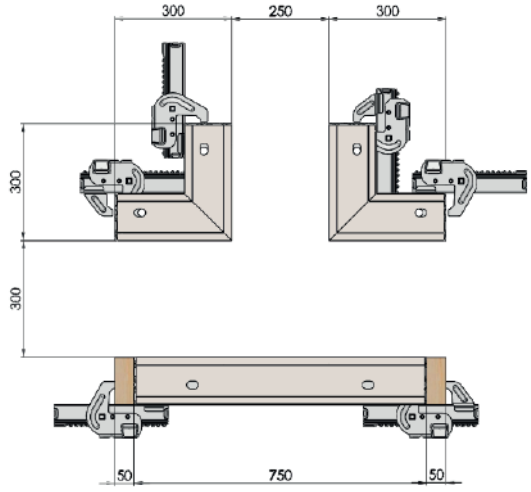

Examples of X-shaped corners:

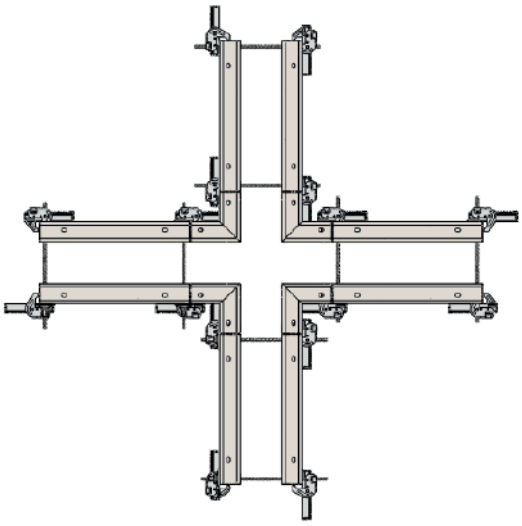

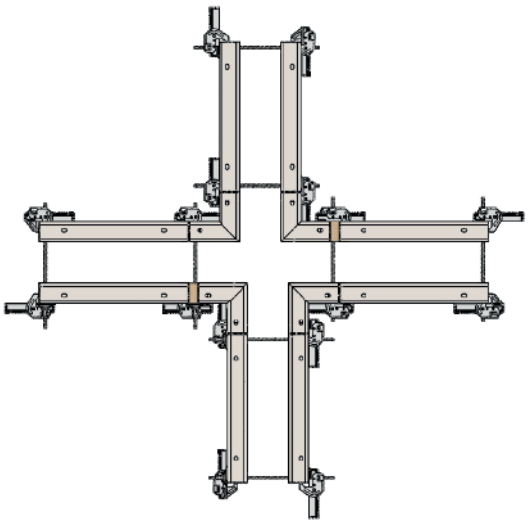

7.2. ACUTE- AND OBTUSE-ANGLED CORNERS.

Acute- and obtuse-angled corners may be erected with hinged corners with a 15 or 30 cm long wing. The narrower one is entirely made of steel, whereas the wider one has a plywood shuttering skin and holes for tie rods arranged in the same way as in the 30 x 30 cm inner corners.

Hinged corners are only available in a steel version. They fit with Bauframe Alu panels.

When erecting formwork with the use of hinged corners, special attention must be paid to the amount of space available for clamps. It is particularly important when using 15x15 cm corner at a sharp angle. This type of corner must be connected to the panels with centering tension bolts. Their number should equal to the number of wedge clamps.

Due to the increased pressure of fresh concrete mix in the outer corner, as well as a limited possibility of tying the panels with tie rods, the VZ panels should be used in the corners, if possible.
It is also vital to ensure that the formwork is properly stiffened and to transfer stresses by using compensation walers with waler spanners.

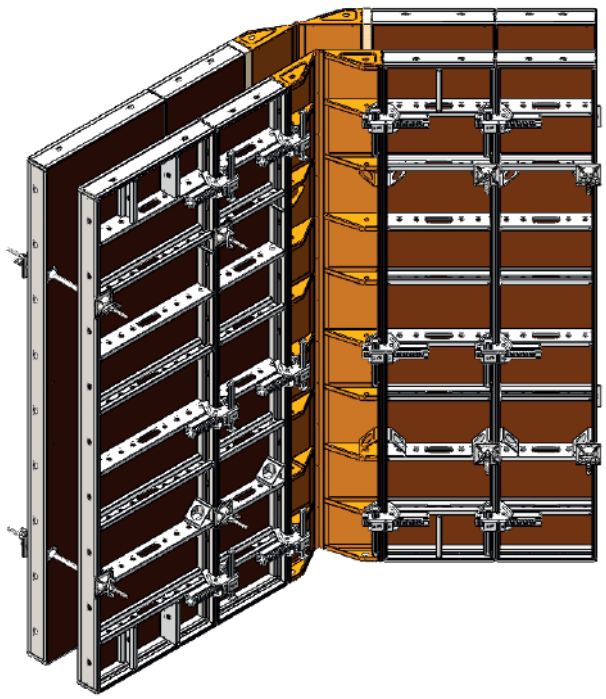

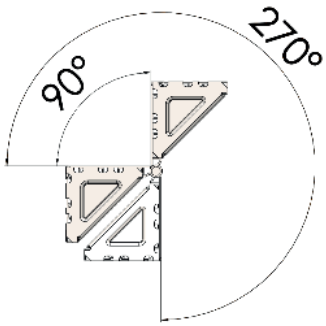

Hinged corner 15x15 can be regulated within the range of 90° - 270° .

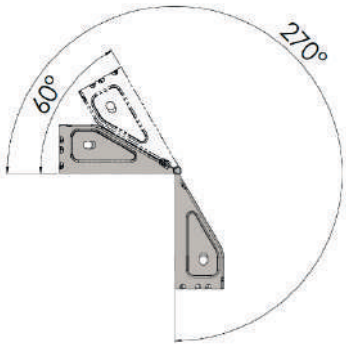

Hinged corner 30x30 can be regulated within the range of 60°-270°.

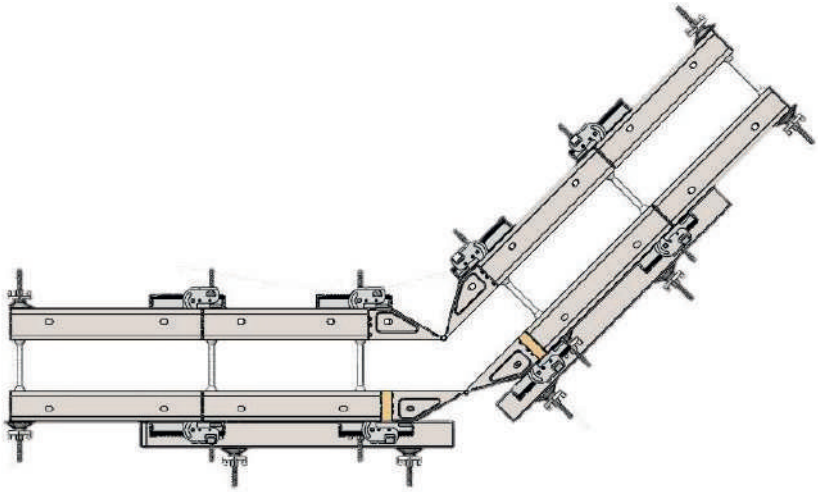

7.3. LENGHT COMPENSATIONS AND INFILLS.

Applying a wedge clamp allows to achieve a stiffer panel connection with a possible length compensation of up to 13.5 cm. This means that the length compensations of the most common dimensions do not require additional accessories.

One of the methods of adjusting formwork length is to use 5 cm long (or a multiple of it) steel infills.

Larger compensations should be made of 8x10 cm or 10x10 cm squared timber or cut to the required width 21 mm plywood.

For compensations larger than 10 cm the connection should be additionally stiffened with compensation walers.

To tie the formwork use through holes in the panels or in the compensation.

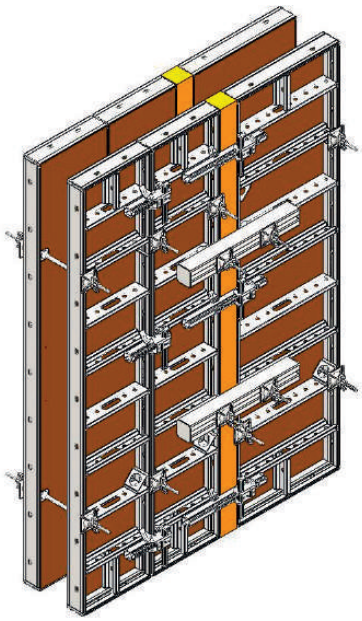

Examples of length compensations of formwork:

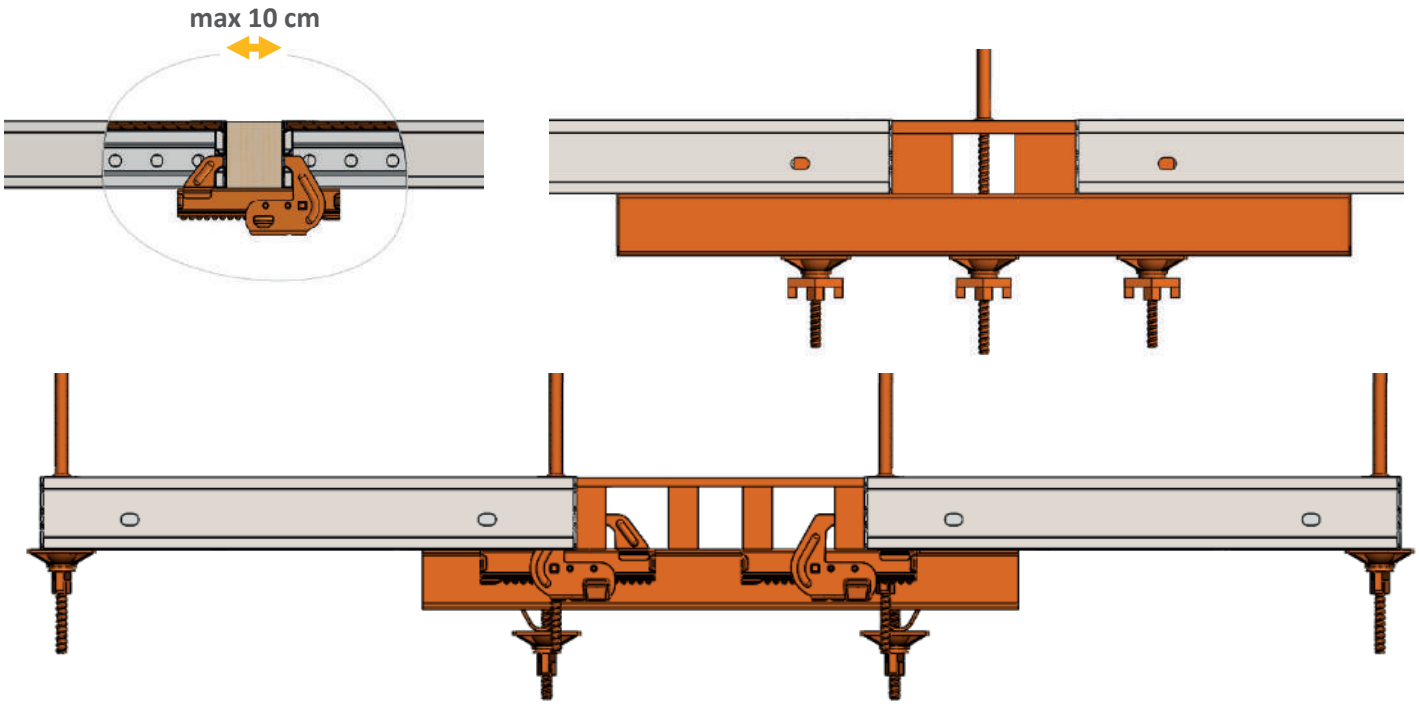

8. FORMING COLUMNS.

8.1. STANDARD PANELS.

Square and rectangular columns with side dimensions of 30 cm - 90 cm in 5 cm increments, which correspond to the widths of the Bauframe system panels, may be erected using standard panels joined with outer corners. The required size of the formwork is obtained by selecting appropriate widths of panels. The connections are made in the same way as for the outside part of the rectangular corner.

Please remember to crease the number of clamps and centering tension bolts, as per table in section 7.1.

Due to the increased formwork effort, caused by the higher concrete column, this solution should not be used to erect columns of small cross-sections. It can only be used occasionally, during slow concrete works.

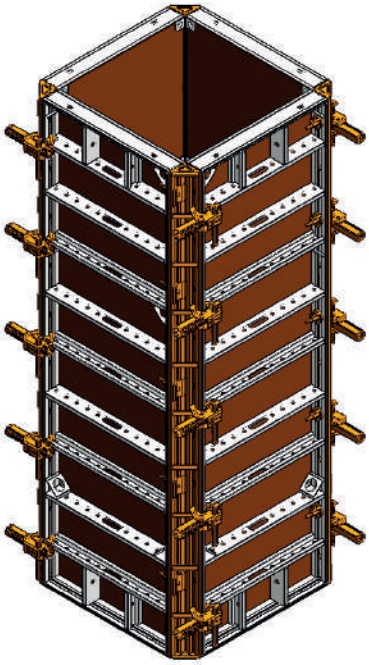

IMPORTANT! When concreting, pay attention to the pressure of fresh concrete mix. Permissible pressure for the Bauframe and Bauframe Alu formwork is 60kN/m²!

Examples of column formwork with the use of standard panels and outer corners:

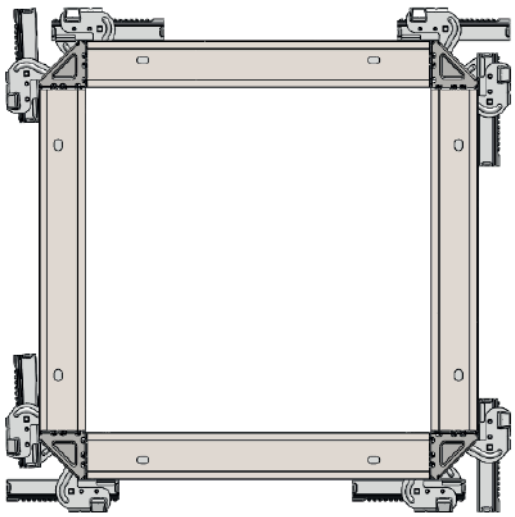

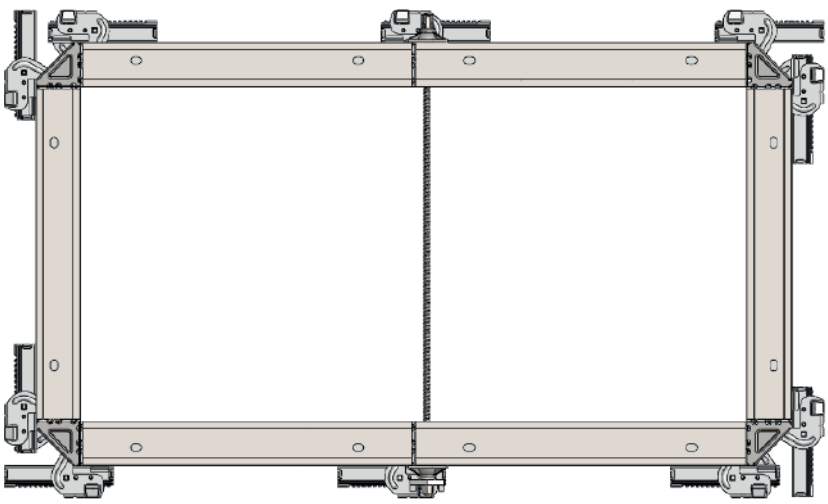

The column formwork from standard panels may also be formed in an alternative way, using corner clamps with a screw.

Please remember to increase the number of clamps and centering tension bolts, as per table in section 7.1. and not to exceed the permissible fresh concrete pressure.

As in the case of formwork erected with the use of outer corners, this solution should not be used to shutter columns with small cross-sections.

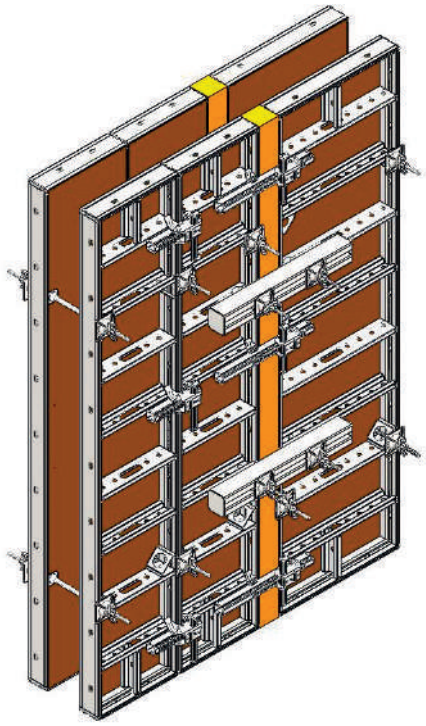

Examples of column formwork with the use of standard panels and corner clamps:

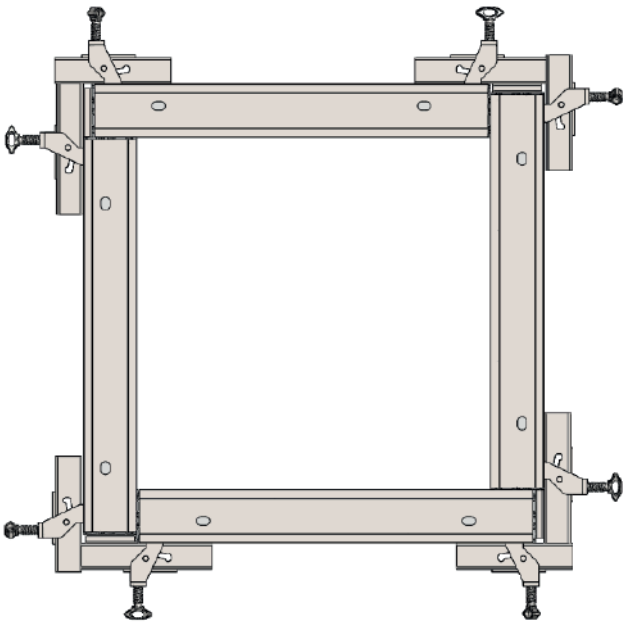

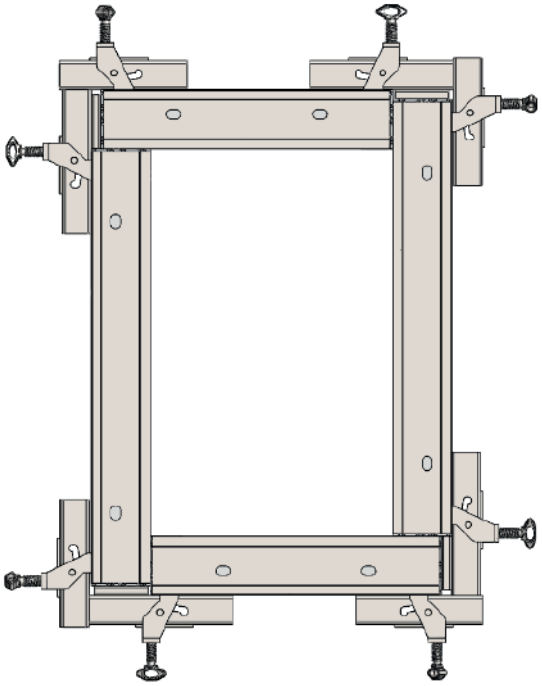

8.2. VZ PANELS

The 70VZ and 90VZ multi-hole panels, connected in the right hand direction in the shape of a windmill, allow to form the rigid and durable formwork of a rectangular column. The dimensions of its side in the projection are 15 cm - 55 cm for the 70VZ panel, and 15 cm - 75 cm for the 90VZ panel, in 5 cm increments.

In order to connect the panels, use MP nuts, MP bolts and articulated nuts for tie rods. Do not use Ø70 and Ø100 nuts.

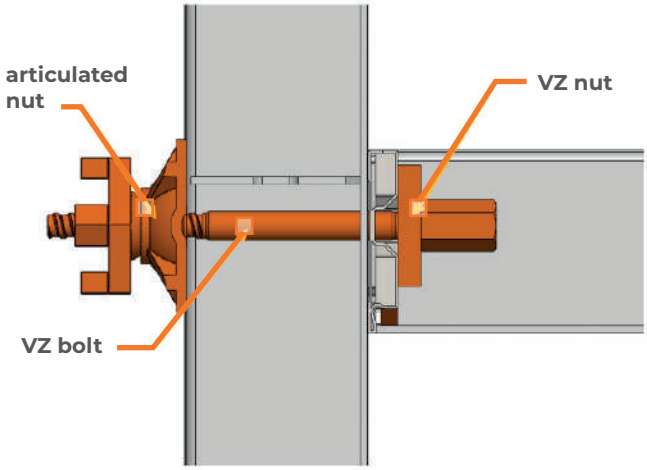

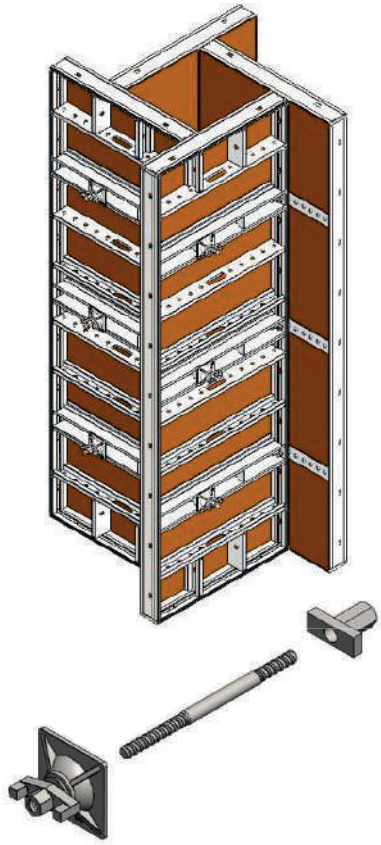

Column formwork with 70 VZ multi-hole panels:

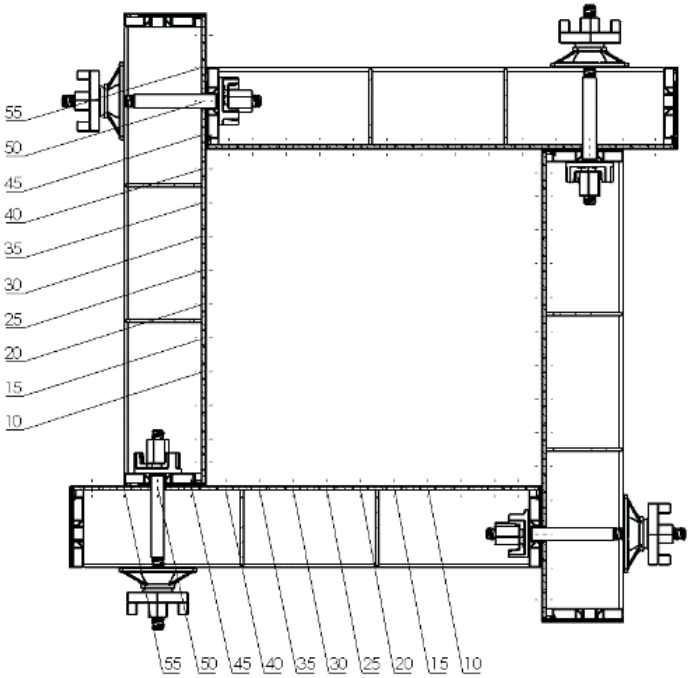

Column formwork with 90 VZ multi-hole panels:

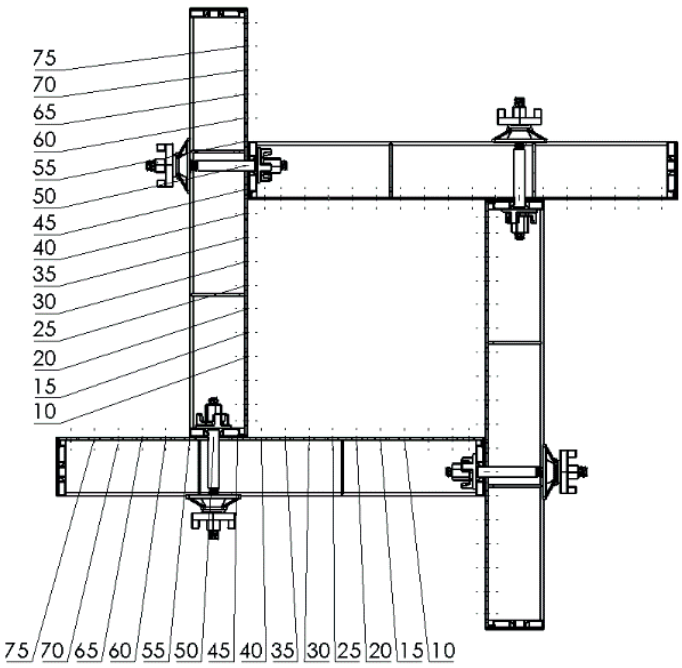

A combination of formwork panels and accessories allows to form a column of different heights. Exemplary sets of column formwork accessories made of VZ panels in typical heights are shown in the table opposite.

When assembling the formwork, it is important to remember about its alignment in both planes. For the formwork with a height of more than 360 cm, it is recommended to use for each plane one double prop and one single prop. It is also vital to ensure that the formwork is properly fixed to the ground.

Depending on the needs, the concrete works may be conducted form the walkway platforms or from the mobile scaffold.

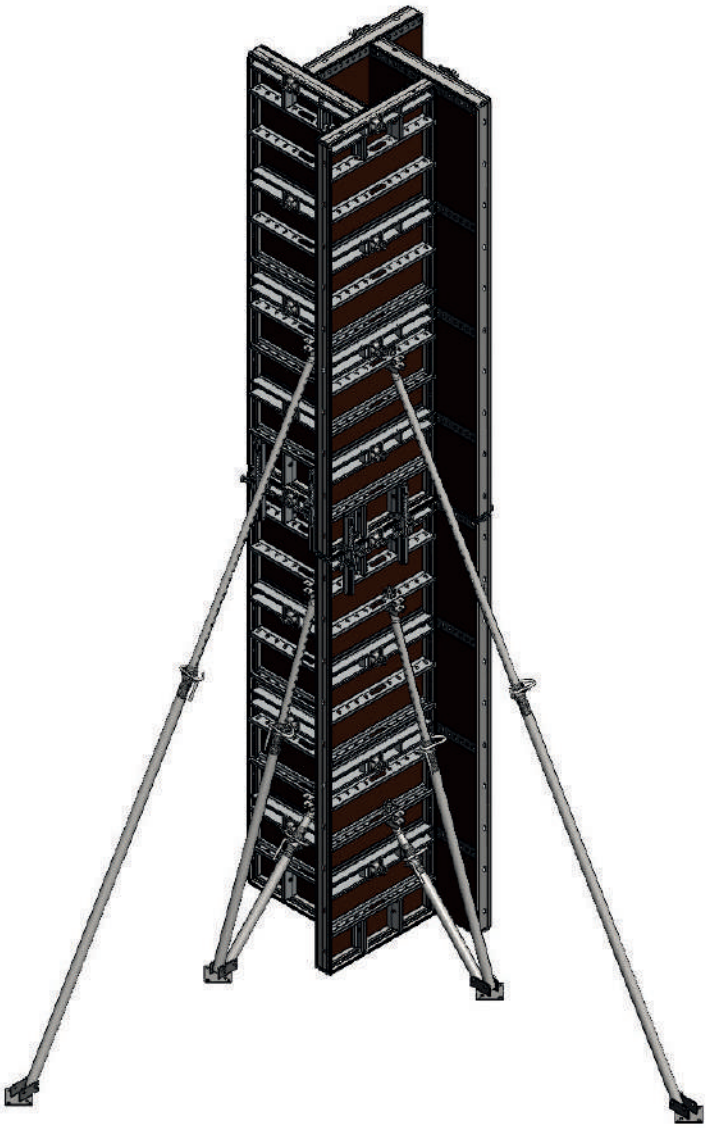

Nr katalogowy	Element	Wysokość szalunku słupa											
		90cm	150cm	270cm	300cm	360cm	390cm	420cm	450cm	480cm	540cm	570cm	600cm
	Płyta 70(90)x90VZ	4	-	-	-	4	4	-	-	8	-	-	-
	Płyta 70(90)x150VZ	-	4	-	-	-	-	4	4	-	-	-	-
	Płyta 70(90)x270VZ	-	-	4	-	4	-	4	-	-	8	4	-
	Płyta 70(90)x300VZ	-	-	-	4	-	4	-	4	4	-	4	8
7271000002	Zamek klinowy Bauframe	-	-	-	-	8	8	8	8	16	8	8	8
7270000002	Sworzeń VZ	8	8	12	16	20	20	20	24	32	24	24	32
727100R001	Nakrętka VZ	8	8	12	16	20	20	20	24	32	24	24	32
7000120120	Nakrętka przegubowa ściągu	8	8	12	16	20	20	20	24	32	24	24	32
7272000000	Stopa podpory pionującej	-	2	2	2	2	2	4	4	4	4	4	4
7271000300	Głowica podpory pionującej	-	2	4	4	4	4	6	6	6	6	6	6
7271080130	Podpora pionująca 0,9-1,3	-	2	2	2	-	-	2	2	2	2	2	2
7270150230	Podpora pionująca 1,6-2,4	-	-	2	2	2	2	2	2	2	2	2	2
7271280470	Podpora pionująca 2,8-4,7	-	-	-	-	2	2	2	2	2	2	2	2
7270000005	Sworzeń stopy	-	-	2	2	2	2	2	2	2	2	2	2

9. ALIGNING FORMWORK.

9.1. PROP HEAD AND PROP BASE PLATE.

To align the formwork use single or double push pull props. The characteristic features of the props allow to work in both directions, so that the formwork is aligned only on one side.

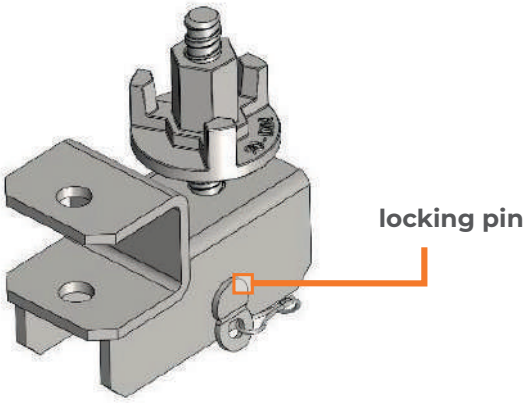

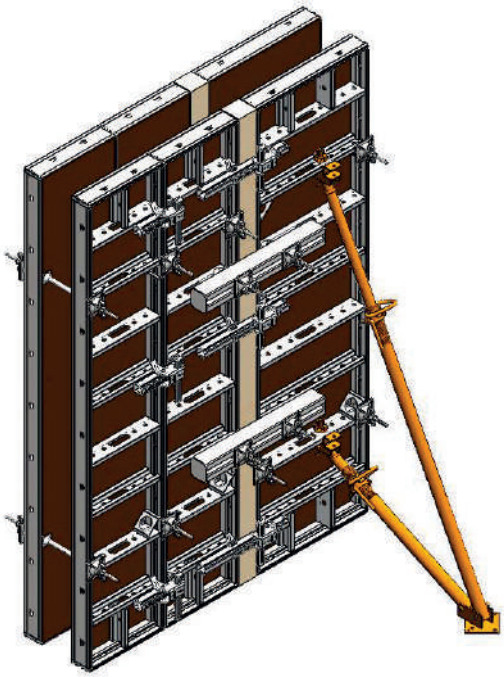

The prop head may be mounted both on the inner or outer profile. This solution enables the formwork to be aligned in vertical and horizontal positions. To change the method of assembling the prop head only remove the pin blocking the prop in the head and assembly it again after turning it by 90°.

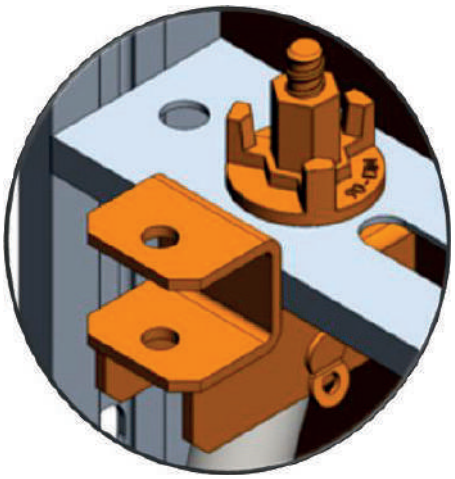

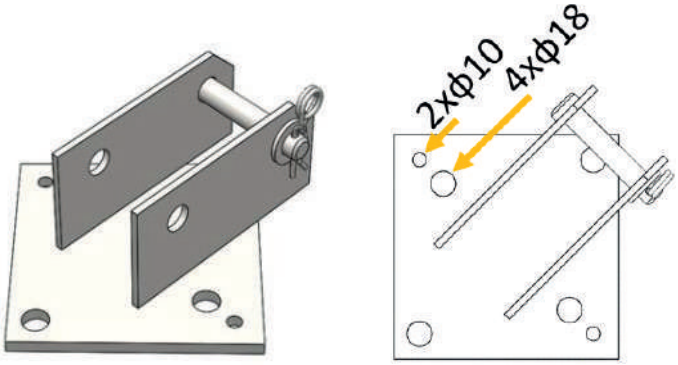

The design of the prop base plate allows to work simultaneously with one or two push pull props. The hole in the base plate facilitate secure fixing to the ground.

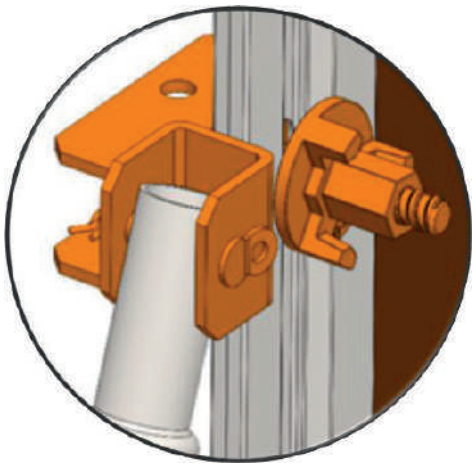

9.2. ARRANGEMENT OF PUSH PULL PROPS.

Pushpullpropsshouldbemountedinspacingsnotgreaterthan2.5m. When mounting the push pull props it is important to ensure that the are securely fixed to the ground. To align the formwork up to 150 cm it is necessary to use 1.5 m single push pull props. The formwork up to 300 cm should be aligned with the 1.5 - 3.0 m double push pull props. The formwork higher than 300 m should be aligned with one single and one double prop.

IMPORTANT!
Push pull props are not to be used to transmit the loads of the fresh concrete mix pressure!

They have been designed to transmit the loads of the formwork when it is being aligned.

PROP TYPE	WEIGHT	FORMWORK WORKING HEIGHT
single push-pull prop 1.5m	12,76kg	up to 150 cm
single push-pull prop 3.0m	17,36kg	up to 300 cm
single push-pull prop 6.0m	25,36kg	up to 600 cm

Drawing of a single push-pull prop:

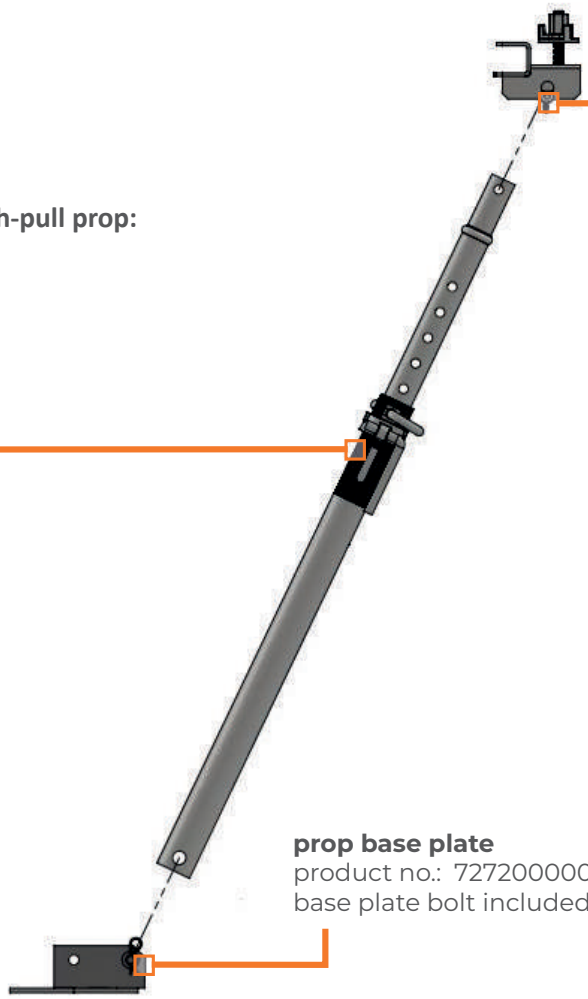

prop head
product no.: 7271000300
nut included

push-pull prop 0.9-1.3
product no.: 7271080130

push-pull prop 1.6-2.4
product no.: 7270150230

push-pull 2.8-4.7
product no.: 7271280470

prop base plate
product no.: 7272000000
base plate bolt included

		push pull prop head	push pull base plate	prop bolt (additional)	single push pull 0.9-1.3	single push pull prop 1.6-2.4	single push pull prop 2.8-4.7
PROP TYPE	WEIGHT	ILOŚĆ					
push pull prop 1.5-3.0	27.45 kg	2	1	1	1	1	-
push pull prop 2.7-6.0	40.05 kg	2	1	1	-	1	1

Schemat podpory pionującej podwójnej:

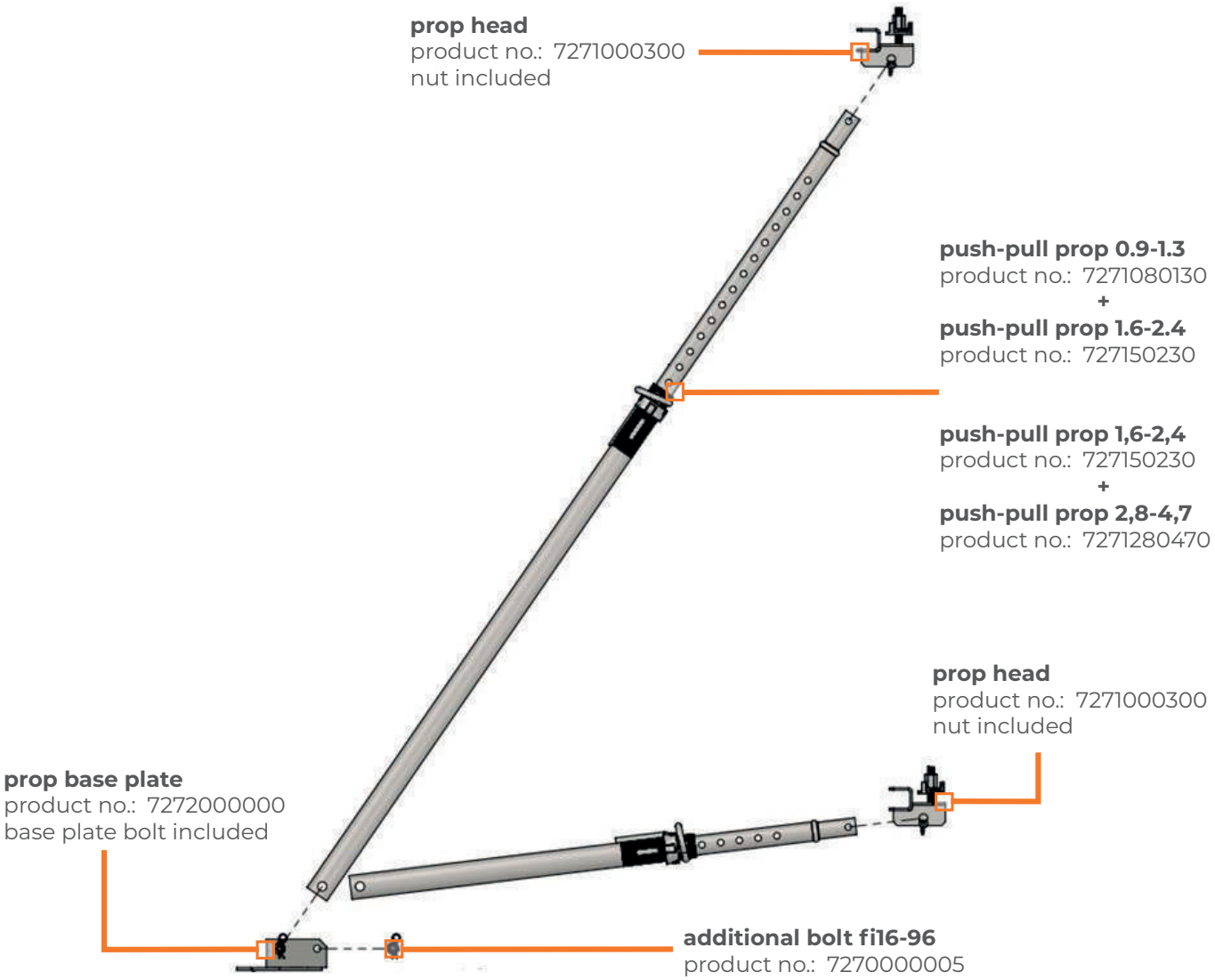

10. WORKING PLATFROMS.

The railing post bracket is the basic element used to install a 90 cm wide working platform. After placing wooden platforms it is possible to carry out concrete works safely.

The maximum spacing between working platforms should not exceed 2 m.

With a railing post attached to the railing post bracket, it is possible to create a guardrail with a toeboard.

Ensure that the platform is properly fixed to the railing post bracket and that the railing post is securely attached to the bracket socket.

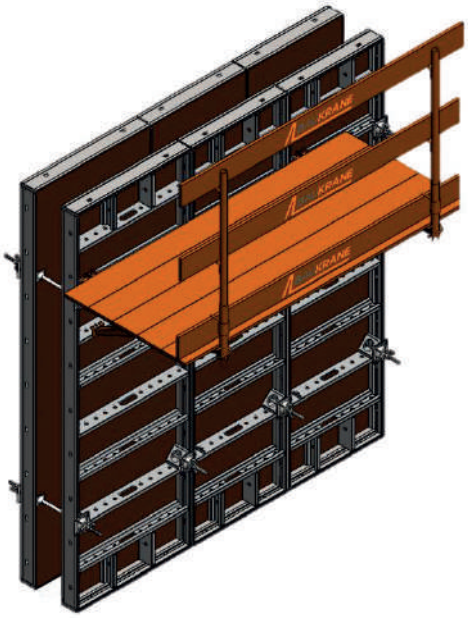

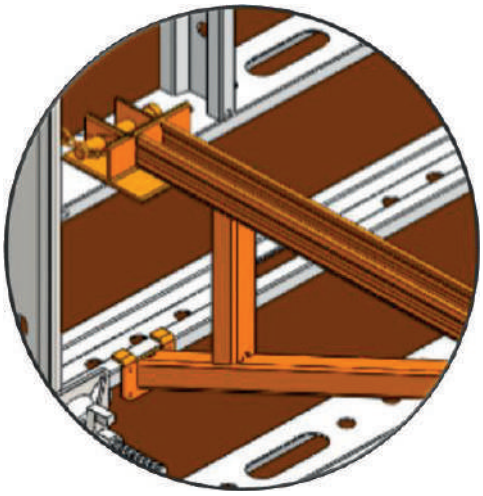

The railing post bracket is designed in such a way that it can be fixed to the inner and outer profile. This solution allows to create a working platform on vertical or horizontal formwork panels. After the bracket has be mounted in the vertical profile, it must be secured against falling out with an integrated bolt.

For wooden working platforms, it is recommended to use seasoned, flawless boards with a thickness of not less than 5 cm. The guardrails are made of seasoned, flawless boards with a thickness not less than 3 cm and a width of at least 20 cm. The toeboard should be at least 15 cm high.

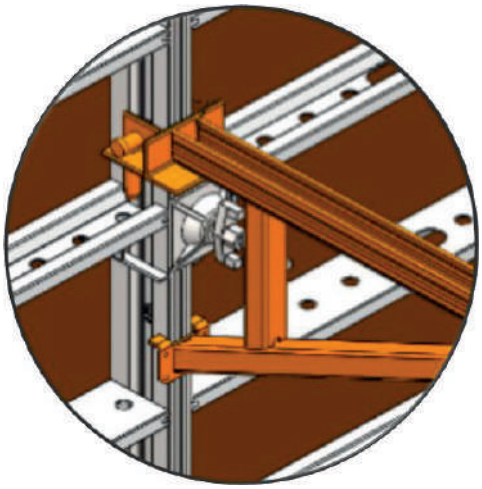

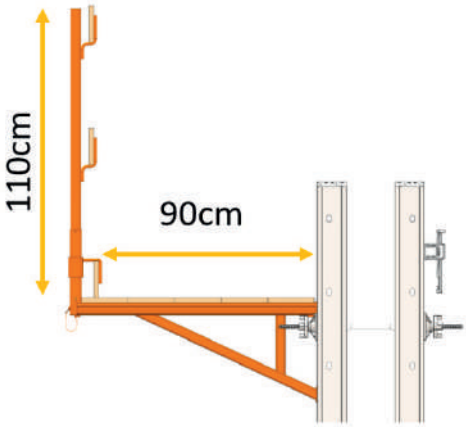

11. RADIAL WALLS.

11.1. WEDGE INFILLS.

One of the methods of erecting radial walls is to place between standard Bauframe and Bauframe Alu panels wooden infills. Their individually selected trapezoidal shape allows to form stages and brings the shape of the wall closer to the desired arch.

Use wedge clamps to connect the panels with the wooden infills. If the panels on the inner side of the formwork are narrower than on the outer side, connect the formwork through the wooden infills.

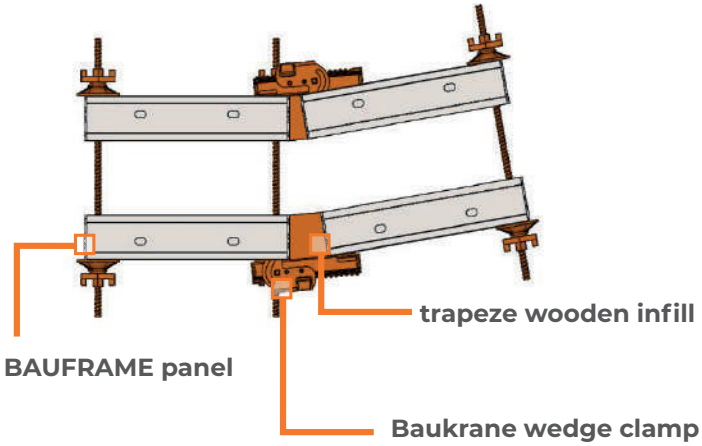

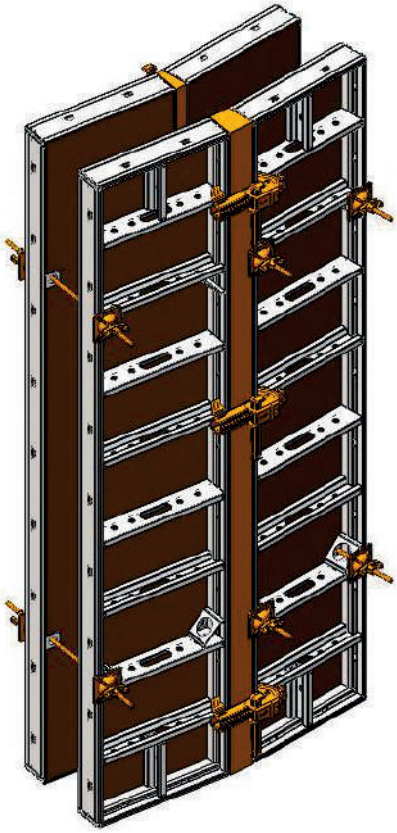

11.2. RADIAL SLATS .

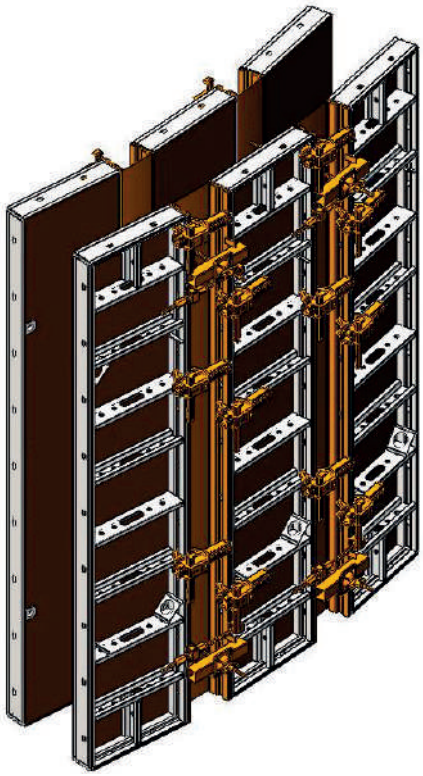

Rather than using wooden infills, it is possible to apply radial slats of the Bauframe system, as an alternative. They are available in the widths of 15 cm, 20 cm and 25 cm.

Use standard wedge clamps and centering tie rods to connect radial slats with the formwork. Drag tie rods through holes in the radial slats, and place articulated nuts on tie rod beams.

The desired wall radius is achieved by adjusting hexagon nuts.

It is not permitted to join the radial slats directly together!

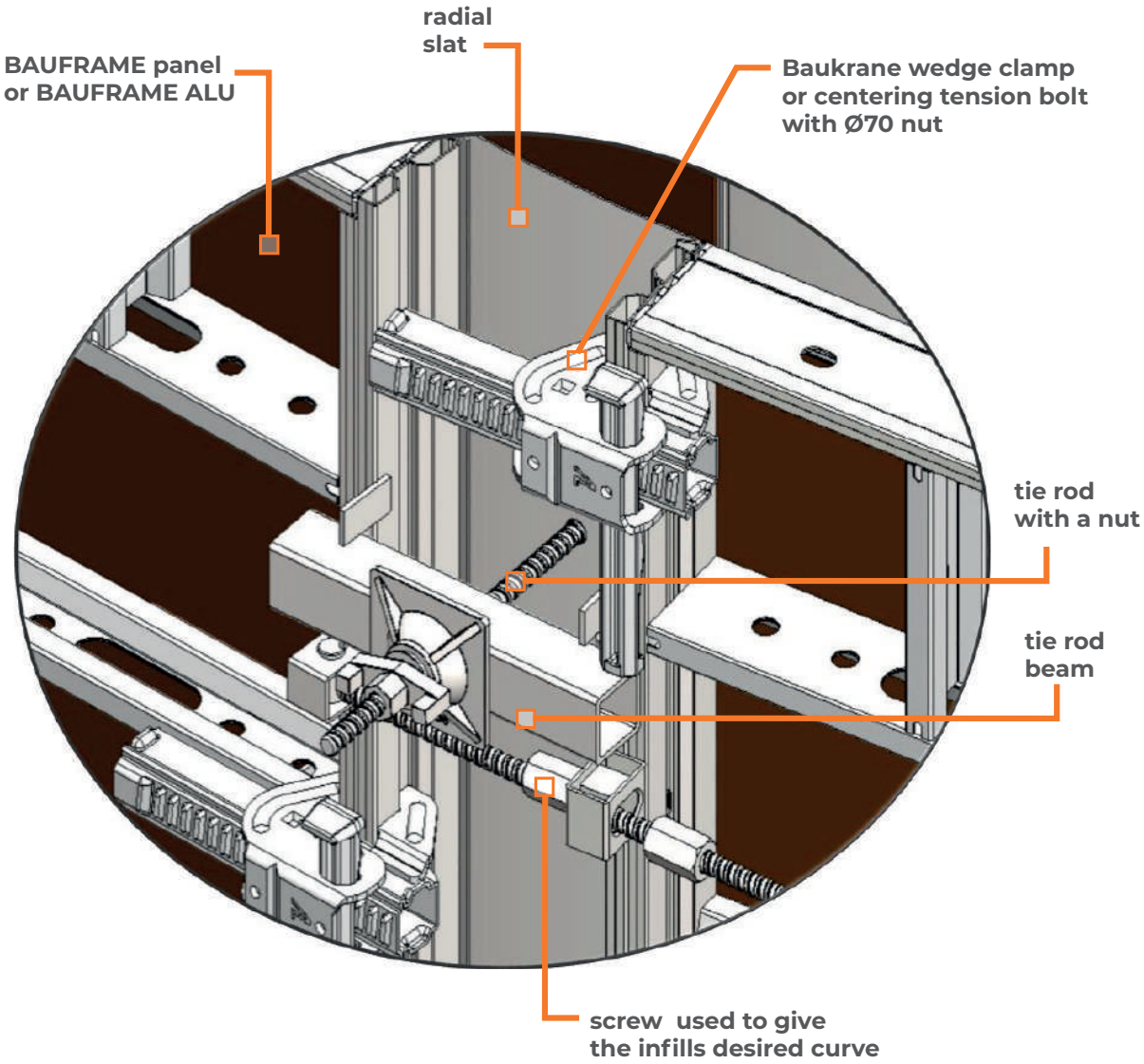
radial
slat
BAUFRAME panel
or BAUFRAME ALU
Baukrane wedge clamp
or centering tension bolt
with Ø70 nut
tie rod
with a nut
tie rod
beam
screw used to give
the infills desired curve

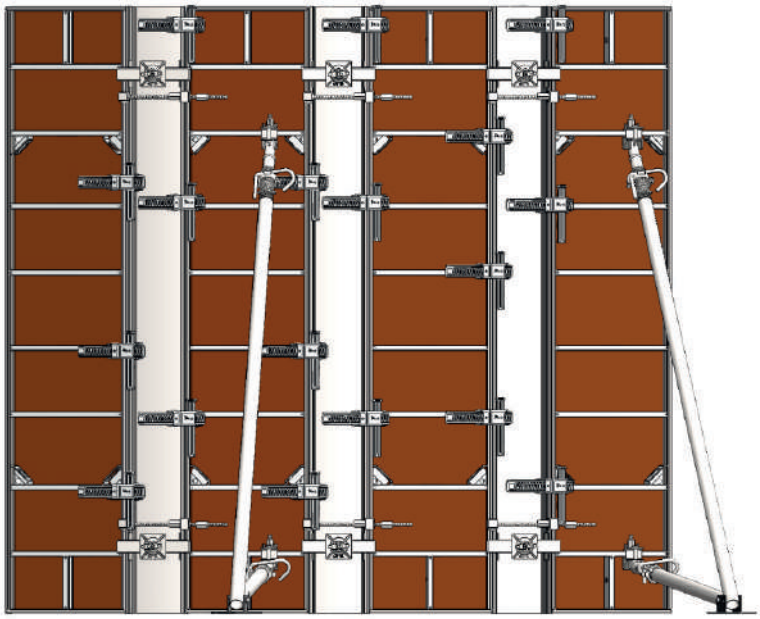

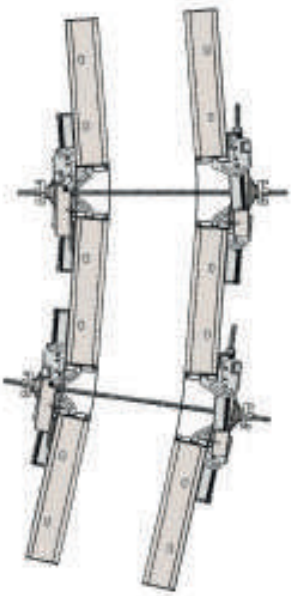

Depending on the width of the panel and the radius of the curve, it is possible to obtain formwork with a different deviation arrow from the ideal curve. The following monograms may be used to determine the most optimal element to be used for the formwork, with a known permissible deviation.

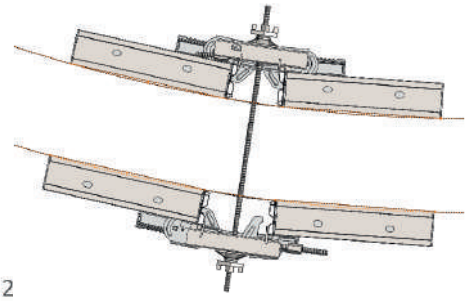

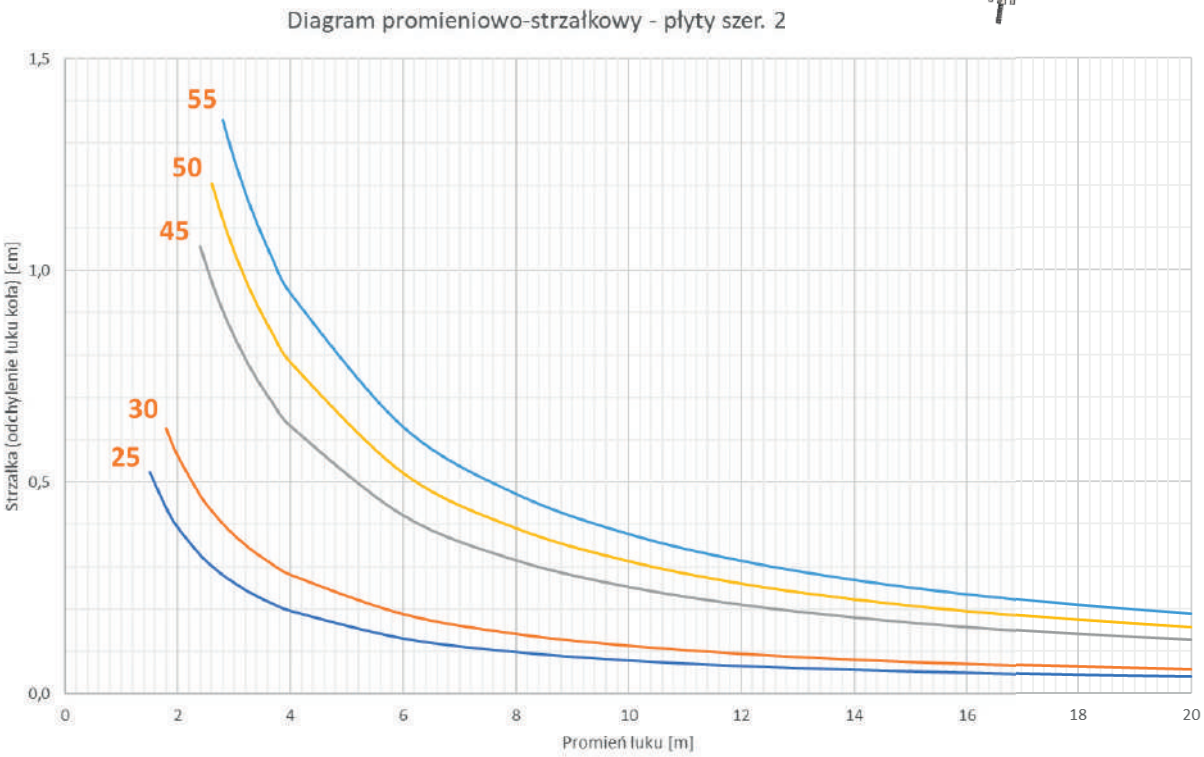

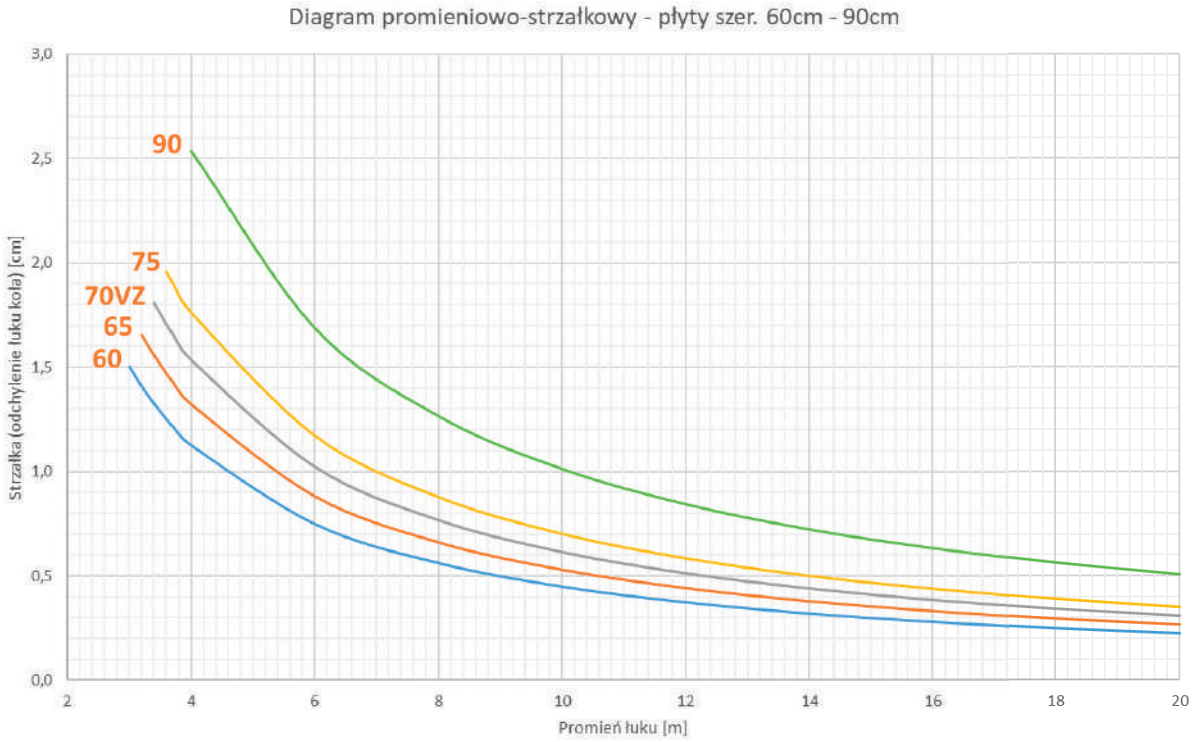

12. TRANSPORT OF FORMWORK.

12.1. BAUFRAME TRANSPORT HOOK.

The only safe way to move the Bauframe and Bauframe Alu panels is to use the Bauframe transport hook. It is possible to move individual panels or a set of panels with this hook.

Permissible load capacity is 12kN (1200 kg).

The Bauframe transport hook is designed to transport the Bauframe and Bauframe Alu panels. Do not use hooks from other systems.

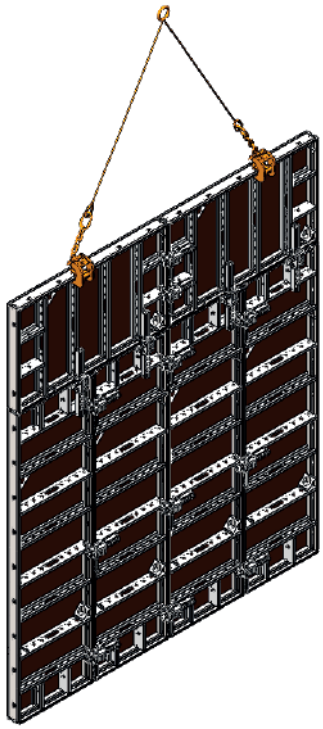

ATTACHING THE BAUFRAME TRANSPORT HOOK TO THE BAUFRAME PANELS:

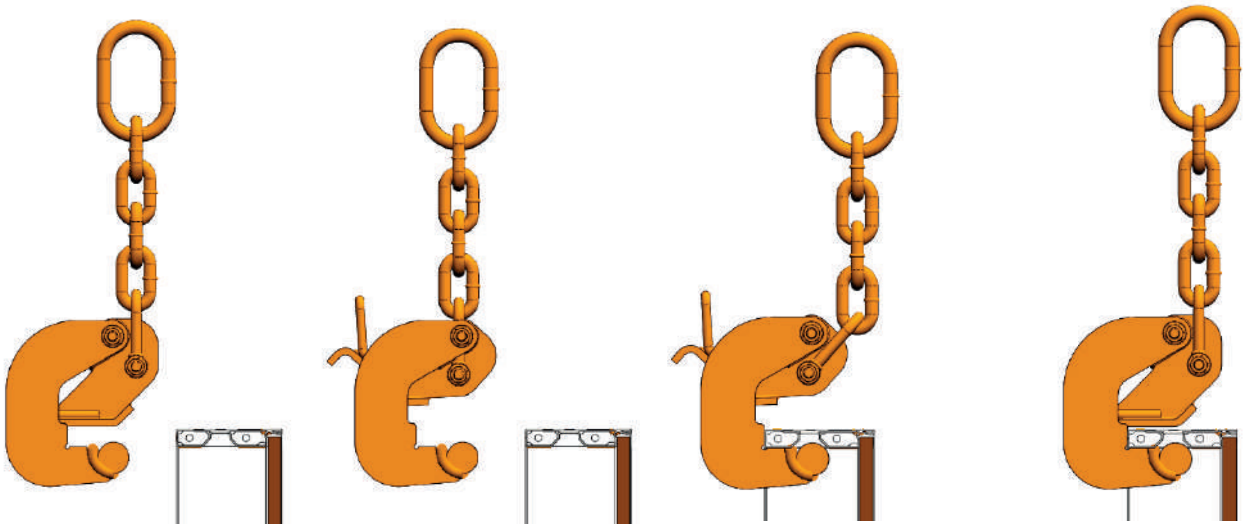

ATTACHING THE BAUFRAME TRANSPORT HOOK TO THE BAUFRAME ALU PANELS:

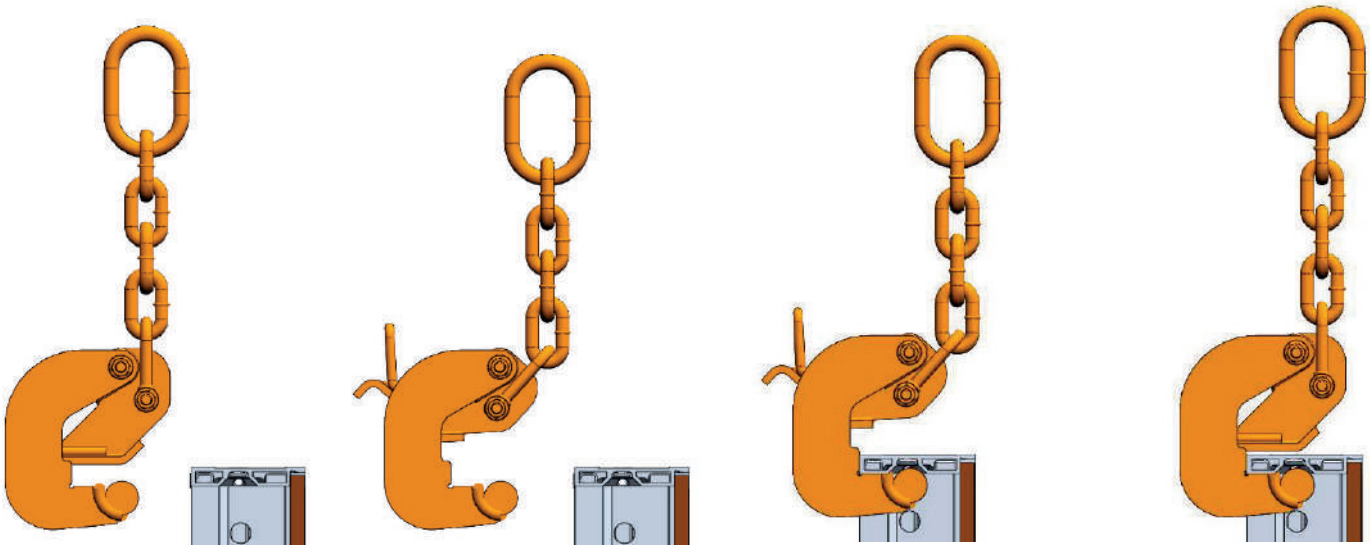

A single hook may only be used to move a single element. The aim should be to place the hook as close to the vertical axis of symmetry as possible. Otherwise, it may tilt to one side or the other uncontrollably.

While using two hooks at the same time to move sets of panels, the angle between the lifting slings should be close to 60 °.

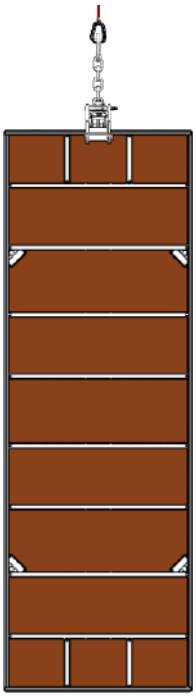

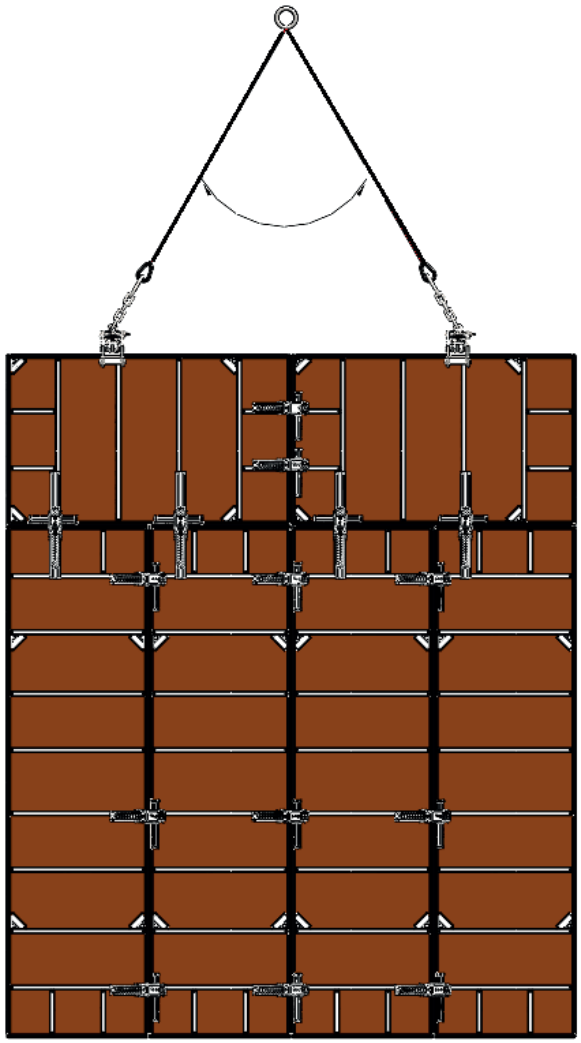

12.2.STORAGE AND TRANSPORT.

Before stacking the panels, place wooden sleepers of at least 8 cm height on the ground. It will make the horizontal or vertical transportation of the stack easier.

The panels should piled in stack not exceed 10 pieces. If it is necessary to stack panels of different widths and heights, the biggest elements should be placed at the bottom. It is not permissible to use more than one panel as the lowest layer of the stack. Every stack of the panels must be tied with a tape. Do not pile more than 3 stacks.

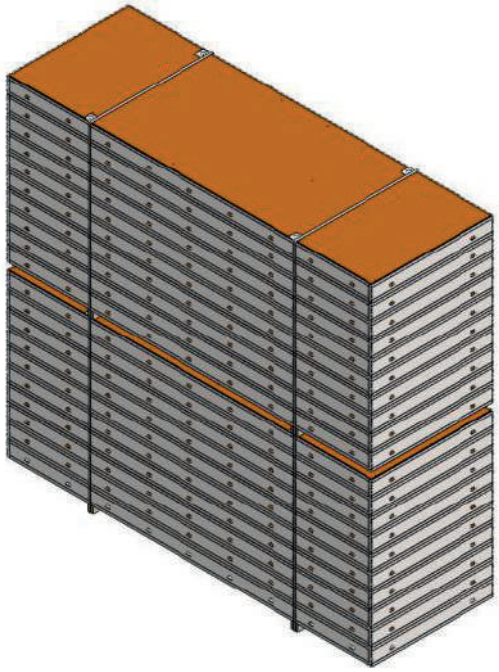

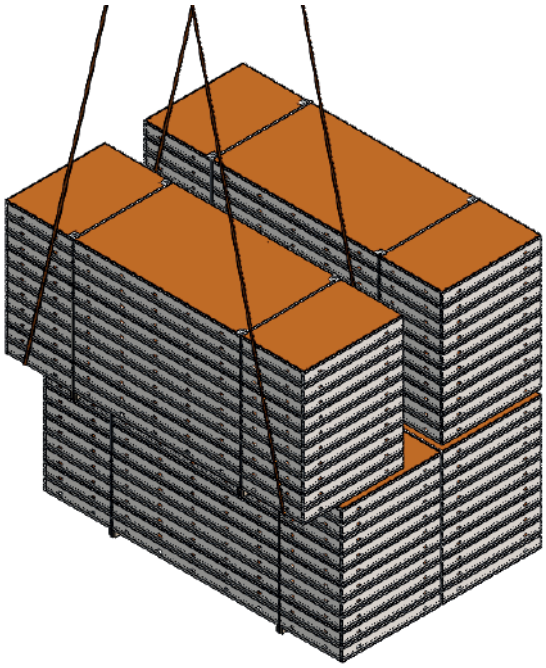

A stack of panels being shifted should be tied at all times. It is not permitted to shift more than one stack at a time. Certified transport belts with an appropriate loading capacity should be used.

Keep in mind that the bottom layer of the stack should always contain only one element. The stack should consist of elements of the same width. If a stack of different width elements should be moved, remember to place the elements of at least half the width of the widest element of the stack at the top.

Unless every edge of the element is wrapped by the belt, the transportation is prohibited.

Formwork accessories should be kept in specially designed net baskets. Not only do they help to keep the construction site tidy, but also allow to transport the load vertically and horizontally in a safe manner.

Only single net baskets may be transported, every time with a closed side wall.

Make sure that the angle of the lifting sling is 30 ° maximum.

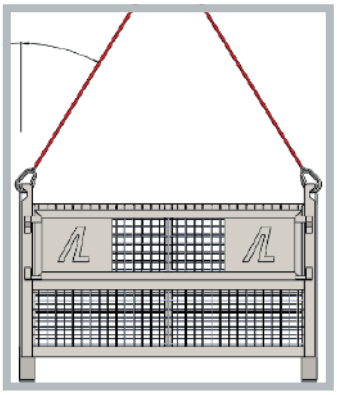

13. CLEANING.

Using a release agent to evenly cover the plywood before concreting makes it easier to strip formwork and clean in from concrete residues.

Immediately after pouring concrete, remove concrete residues from the outside of the formwork with water.

Right after stripping, clean the surface of the formwork with a power washer and a hand scraper. Be careful with silicone grouts, As they are sensitive to this type of cleaning and can be easily damaged if the pressured water is used for too long.

Use a scraper to clean difficult to remove residues of concrete. Do not clean the formwork with sharp or pointed tools, wire brushes or rotating sanding discs and griding brushes. Using these tools may result in permanent damage to the shuttering skin and ant-corrosion galvanised coating, which protects the frame of the panel.

14. CONCRETE PRESSURE.

The Bauframe and Bauframe Alu systems have been designed for a permissible fresh concrete pressure of 60kN/m^2. The value obtained allows to maintain the flatness tolerance based on DIN18202 (table 3, line 7). The diagram below shows a simplified method of determining the pressure of the fresh concrete mix (Pb) depending on the speed of pouring concrete (v) and consistency, according to DIN18218.

The consistency of the concrete mix is provided by the supplier. The site manager decides on the other information needed to determine the required pressure. Concrete works should be monitored at all times and the speed of pouring concrete regulated. The site manager is responsible for determining the actual pressure of the fresh concrete mix.

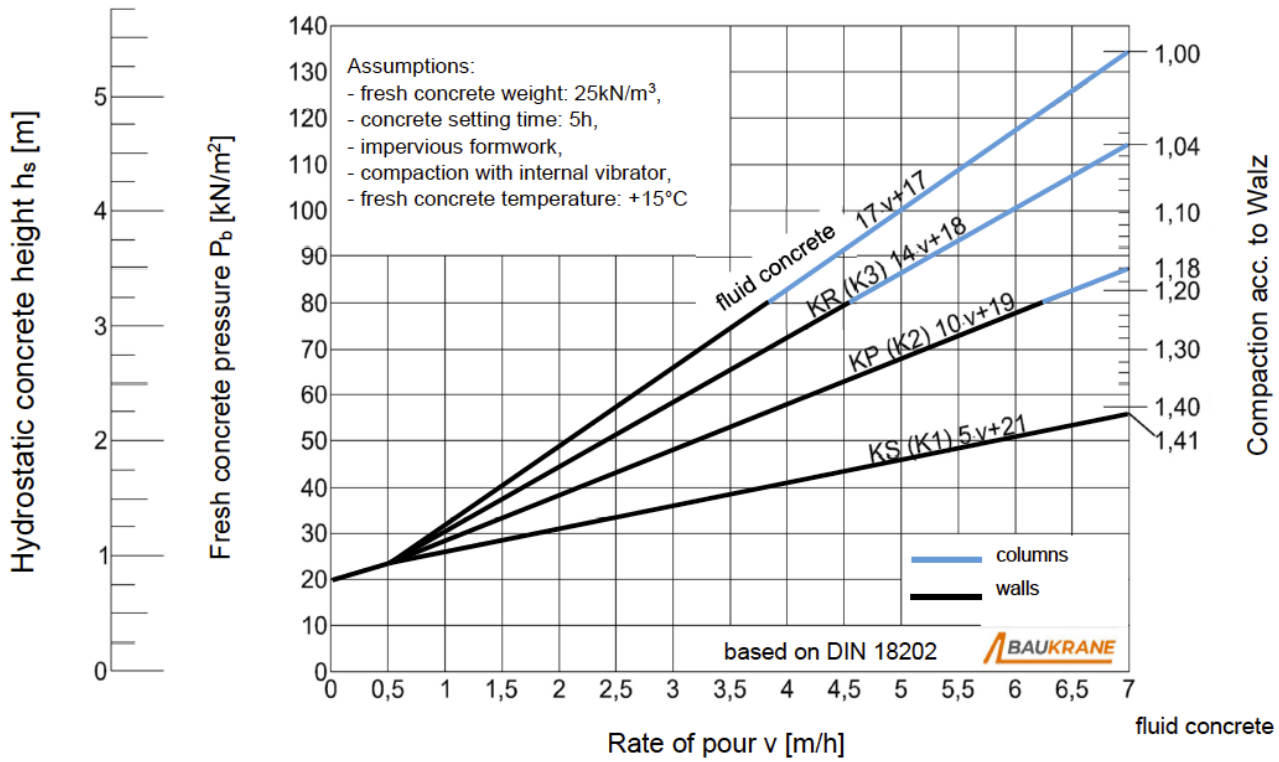

15. SAFETY INSTRUCTIONS

Complying with the occupational health and safety regulations and the instructions for assembly and use is very important for preserving safety during assembly and disassembly of the formwork. This document should be used as an aid to determine occupational hazard. It should be used especially as a source of information about possible hazards during product use. This document, however, does not replace risk assessment and does not provide all information about every hazard associated with the use of the product.

Please note that the presented here reference drawings are partial and mainly illustrate an issue discussed in the relevant part of the manual. Therefore, they may be incomplete as far as work safety is concerned and should not be used as an assembly guidelines. Only following all of the guideline and instructions described in this document guarantees complete work safety.

Everyone who works with the formwork should be familiar with this document and with all other safety instructions complying this equipment. Please pay special attention to people with limited cognitive skills or to people who do not speak the language well and who may find this manual difficult to understand. These workers should be carefully instructed and, if this is not sufficient, should use the equipment under supervision.

Meticulously check every element before use. Damaged, weakened, incomplete or corroded parts should be removed from use. Any use of the components that are not part of the Baukrane system may result in hazard and should be thoroughly checked every time. Any change to the component that deviates from the factory specification is not acceptable and may pose a safety risk.

The formwork may only be assembled and disassembled by the employees (fitters) who have been properly trained and who are familiar with the assembly instructions and parameters of the given type of formwork. Assembling and disassembling of the formwork shall be carried out according to the procedure included in this instructions for assembly and use. In case of any doubts, the user should contact the manufacturer. Improper or inconsistent with this document use may result in defects, damages or accident hazard on site.

The equipment should be unloaded with the use of a mechanical appliance or manually. Dropping formwork elements is strictly forbidden. The stored elements should not cross and be stacked in such way that they may slide, cause damage to the elements or pose a risk.

No person must be under the crane loading or unloading the equipment.

The formwork may be used after it has be accepted by the site manager or other authorised person.

Accepting the formwork should be confirmed with an entry to the site logbook or technical acceptance report.